Model reduction of nonlinear systems using incremental system properties

Bart Besselink

ACCESS Linnaeus Centre & Department of Automatic Control
KTH Royal Institute of Technology, Stockholm, Sweden

L2S, Supelec, Gif-sur-Yvette, France, 8 October 2015

Acknowledgements

Nathan van de Wouw[1,2,3], Henk Nijmeijer[1]

[1] Eindhoven University of Technology, Eindhoven, the Netherlands
[2] University of Minnesota, Minneapolis, USA
[3] Delft University of Technology, Delft, the Netherlands

Jacquelien Scherpen

University of Groningen, Groningen, the Netherlands

Introduction

Practical engineering problems typically lead to complex, high-order dynamical models

Disadvantages of high-order models

- Difficult system analysis
- Time-consuming simulations
- Controller design infeasible

Solar panel

Robot

Chemical plant

Introduction

Practical engineering problems typically lead to complex, high-order dynamical models

Nonlinearities often play an important role

- Mechanical systems: friction, backlash, hysteresis
- Electrical systems: nonlinear components, electrostatics

Solar panel

Robot

Chemical plant

The model reduction problem

Problem. Given a dynamical system Σ, find a reduced-order system $\hat{\Sigma}$ that approximates its input-output behavior

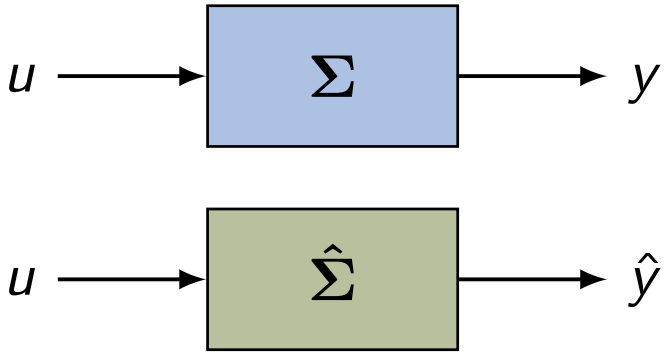

$$\Sigma : \begin{cases} \dot{x} = f(x) + g(x)u \\ y = h(x) \end{cases}$$

with $x \in \mathbb{R}^n$, n large

$$\hat{\Sigma}_k : \begin{cases} \dot{\xi} = \hat{f}(\xi) + \hat{g}(\xi)u \\ \hat{y} = \hat{h}(\xi) \end{cases}$$

with $\xi \in \mathbb{R}^k$, $k < n$ small

The model reduction problem

Problem. Given a dynamical system Σ, find a reduced-order system $\hat{\Sigma}$ that approximates its input-output behavior

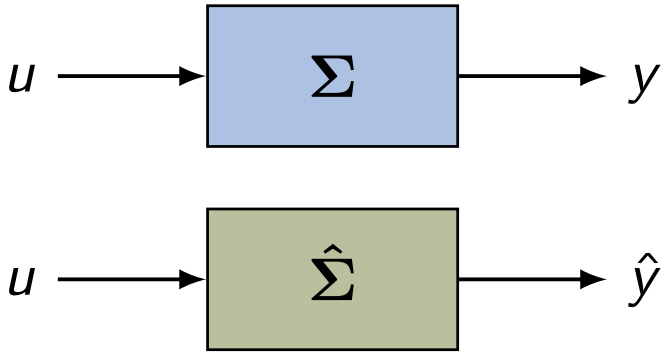

$$\Sigma : \begin{cases} \dot{x} = f(x) + g(x)u \\ y = h(x) \end{cases}$$

with $x \in \mathbb{R}^n$, n large

$$\hat{\Sigma}_k : \begin{cases} \dot{\xi} = \hat{f}(\xi) + \hat{g}(\xi)u \\ \hat{y} = \hat{h}(\xi) \end{cases}$$

with $\xi \in \mathbb{R}^k$, $k < n$ small

Objectives

1. Preservation of system properties (in particular, stability)

The model reduction problem

Problem. Given a dynamical system Σ, find a reduced-order system $\hat{\Sigma}$ that approximates its input-output behavior

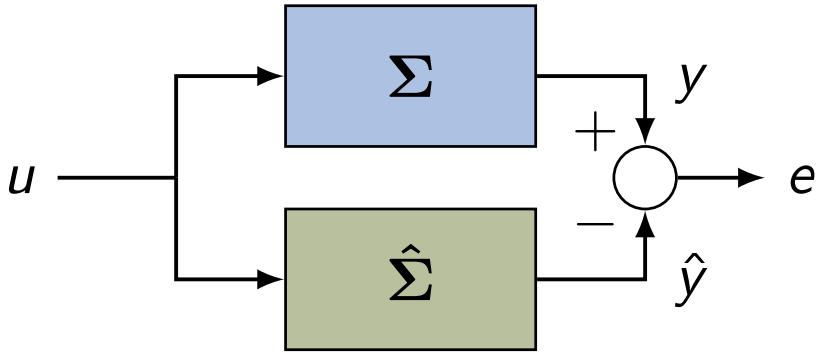

$$\Sigma : \begin{cases} \dot{x} = f(x) + g(x)u \\ y = h(x) \end{cases}$$

with $x \in \mathbb{R}^n$, n large

$$\hat{\Sigma}_k : \begin{cases} \dot{\xi} = \hat{f}(\xi) + \hat{g}(\xi)u \\ \hat{y} = \hat{h}(\xi) \end{cases}$$

with $\xi \in \mathbb{R}^k$, $k < n$ small

Objectives

1. Preservation of system properties (in particular, stability)
2. Bound on the reduction error $e = y - \hat{y}$ (e.g., $\|e\|_2 \leq \varepsilon \|u\|_2$)

Model reduction techniques

Objectives

1. Preservation of relevant stability properties
2. Error bound (a priori)

For linear systems, model reduction techniques satisfying 1. and 2. exist (e.g., balanced truncation [Moore, Glover] and extensions)

Model reduction techniques

Objectives

1. Preservation of relevant stability properties
2. Error bound (a priori)

For linear systems, model reduction techniques satisfying 1. and 2. exist (e.g., balanced truncation [Moore, Glover] and extensions)

Model reduction for nonlinear systems

- Balanced truncation for nonlinear systems [Scherpen, Fujimoto]
- Moment matching for nonlinear systems [Astolfi]
- Trajectory piecewise linear approximation [Rewieński, White]
- Proper orthogonal decomposition [Sirovich, Berkooz]

Model reduction techniques

Objectives

1. Preservation of relevant stability properties
2. Error bound (a priori)

For linear systems, model reduction techniques satisfying 1. and 2. exist (e.g., balanced truncation [Moore, Glover] and extensions)

Model reduction for nonlinear systems

- Balanced truncation for nonlinear systems [Scherpen, Fujimoto]
- Moment matching for nonlinear systems [Astolfi]
- Trajectory piecewise linear approximation [Rewieński, White]
- Proper orthogonal decomposition [Sirovich, Berkooz]

Existing model reduction techniques for nonlinear systems do not generally satisfy 1. and 2.

Outline

Model reduction for nonlinear systems

1. A class of convergent nonlinear systems
2. Nonlinear systems with incremental gain or passivity properties
3. Incremental balanced truncation for nonlinear systems

Outline

Model reduction for nonlinear systems

1. A class of convergent nonlinear systems
2. Nonlinear systems with incremental gain or passivity properties
3. Incremental balanced truncation for nonlinear systems

Incremental system properties are crucial in

1. the preservation of relevant stability properties;
2. the derivation of a priori error bounds

Problem setting and approach

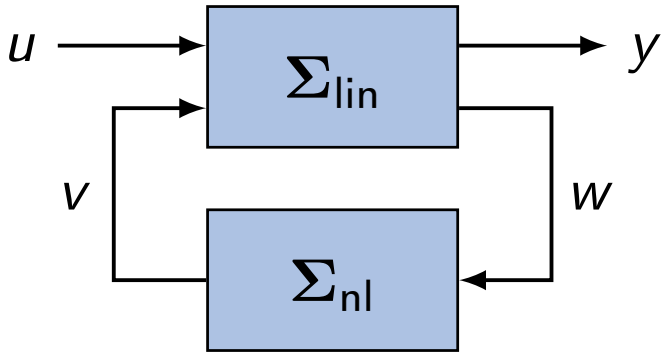

Motivation

- Nonlinearities often act only locally
- Examples
  - Mechanical systems with friction, hysteresis
  - Systems with nonlinear actuator dynamics
  - Variable-gain controlled linear systems

Problem setting and approach

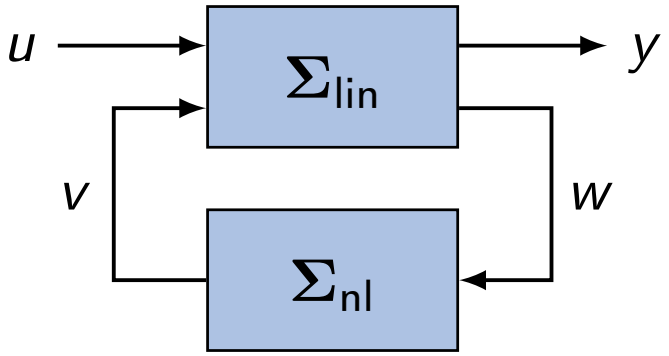

Motivation

- Nonlinearities often act only locally
- Examples
  - Mechanical systems with friction, hysteresis
  - Systems with nonlinear actuator dynamics
  - Variable-gain controlled linear systems

Class of Lur'e-type systems is included (when Σ_{nl} is static)

Problem setting and approach

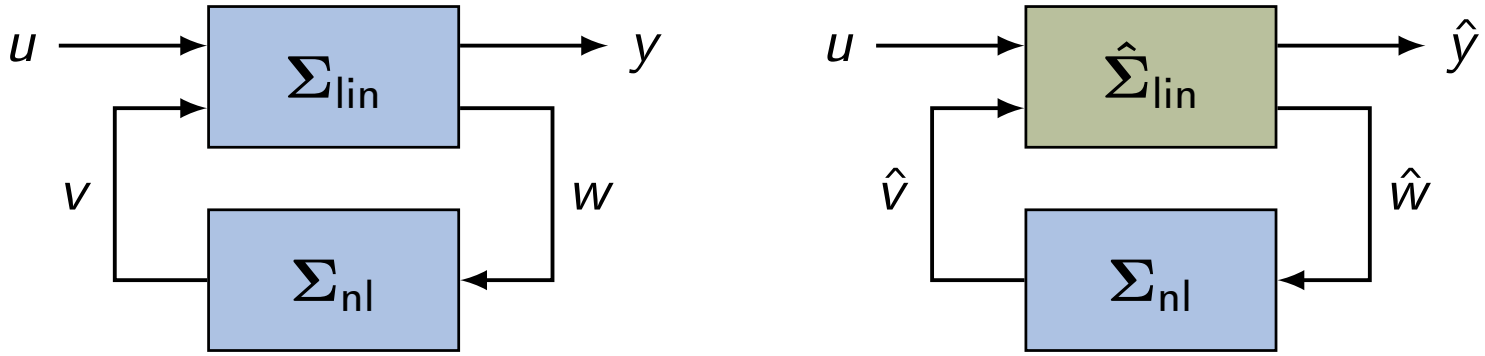

Model reduction approach

- Reduction of high-order linear subsystem Σ_{lin} only, taking into account inputs (u, v) and outputs (y, w)
- Reconnect nonlinear subsystem Σ_{nl}

Problem setting and approach

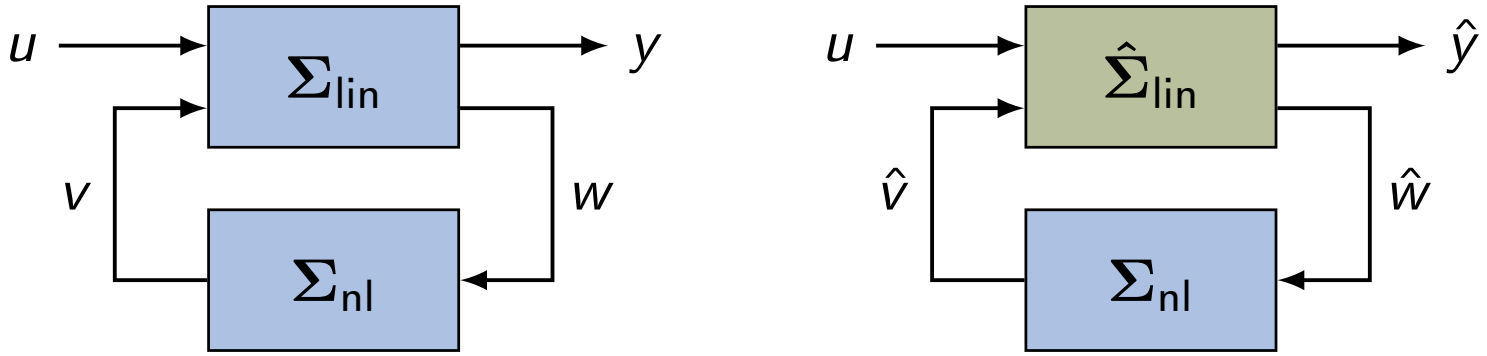

Model reduction approach

- Reduction of high-order linear subsystem Σ_{lin} only, taking into account inputs (u, v) and outputs (y, w)
- Reconnect nonlinear subsystem Σ_{nl}

- Allows for the use of existing model reduction techniques
- Computationally feasible

Input-to-state convergence

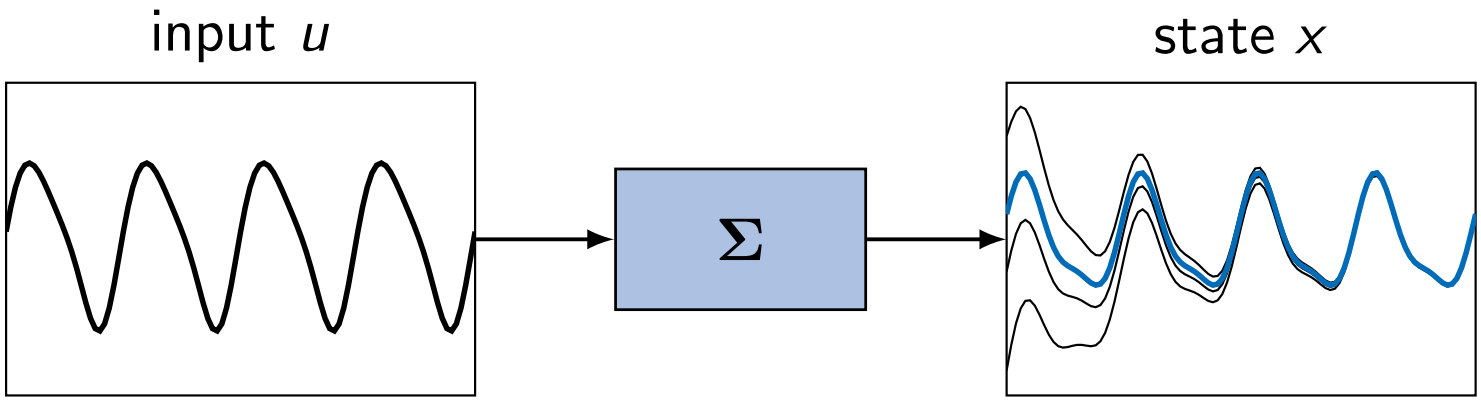

Definition. The operator $\mathcal{F} : \mathcal{L}_\infty^m \to \mathcal{L}_\infty^n$ defined as

$$\mathcal{F}u(t) := \bar{x}_u(t)$$

is said to be the steady-state operator of the uniformly convergent system $\dot{x} = f(x, u)$, $x \in \mathbb{R}^n$, $u \in \mathbb{R}^m$

Input-to-state convergence

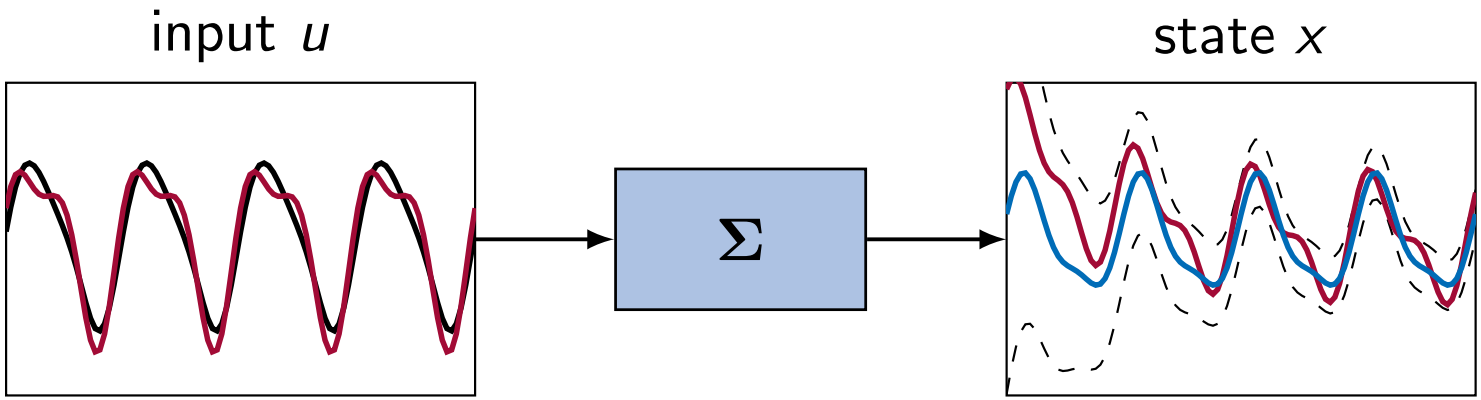

Definition. A system is input-to-state convergent (ISC) if it is globally uniformly convergent and

$$|x(t) - \bar{x}_u(t)| \leq \beta\big(|x(t_0) - \bar{x}_u(t_0)|, t - t_0\big) + \gamma\Big(\sup_{t_0 \leq \tau \leq t} |\tilde{u}(\tau) - u(\tau)|\Big)$$

holds for all $t \geq t_0$, with $\beta \in \mathcal{KL}$ and $\gamma \in \mathcal{K}_\infty$

Input-to-state convergence

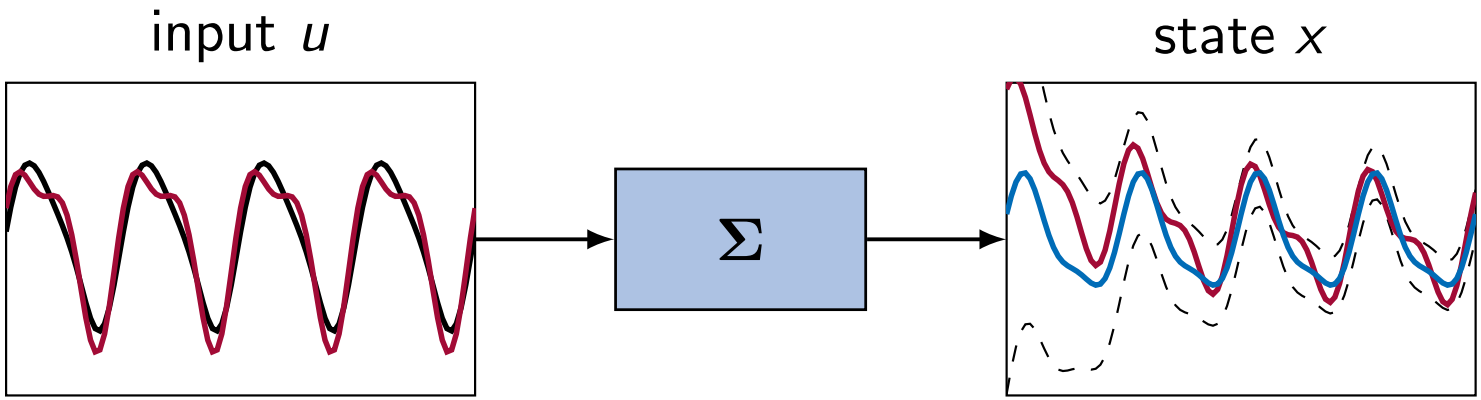

Definition. A system is input-to-state convergent (ISC) if it is globally uniformly convergent and

$$|x(t) - \bar{x}_u(t)| \leq \beta\big(|x(t_0) - \bar{x}_u(t_0)|, t - t_0\big) + \gamma\Big(\sup_{t_0 \leq \tau \leq t} |\tilde{u}(\tau) - u(\tau)|\Big)$$

holds for all $t \geq t_0$, with $\beta \in \mathcal{KL}$ and $\gamma \in \mathcal{K}_\infty$

Lemma. Let a system $\dot{x} = f(x, u)$ be input-to-state convergent. Then, the steady-state operator is incrementally bounded as

$$\|\mathcal{F}u_2 - \mathcal{F}u_1\|_\infty \leq \gamma(\|u_2 - u_1\|_\infty), \qquad \|x\|_\infty = \sup_{\tau \in \mathbb{R}} |x(\tau)|$$

Small-gain theorem for ISC systems

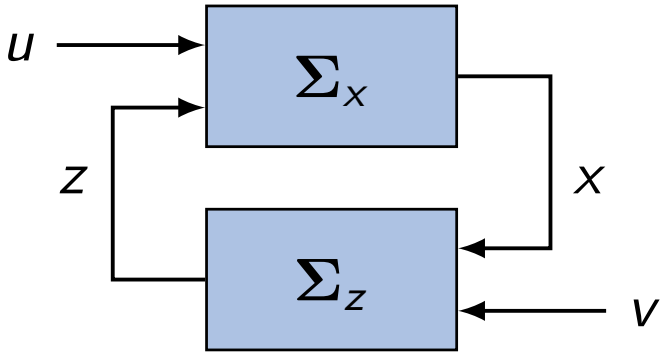

$\Sigma_x : \dot{x} = f(x, z, u)$ ISC with γ_{xz}, γ_{xu}

$\Sigma_z : \dot{z} = g(z, x, v)$ ISC with γ_{zx}, γ_{zv}

Small-gain theorem for ISC systems

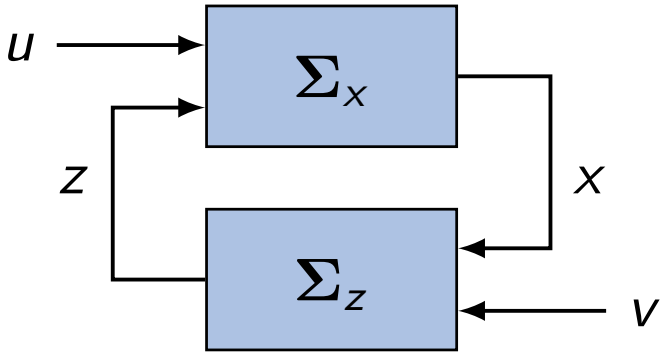

$\Sigma_x : \dot{x} = f(x, z, u)$ ISC with γ_{xz}, γ_{xu}

$\Sigma_z : \dot{z} = g(z, x, v)$ ISC with γ_{zx}, γ_{zv}

Theorem. The feedback interconnection is input-to-state convergent if there exist functions ρ_1, ρ_2 of class $\mathcal{K}_\infty$ such that

$$(\mathrm{id} + \rho_1) \circ \gamma_{xz} \circ (\mathrm{id} + \rho_2) \circ \gamma_{zx}(s) \leq s$$

holds for all $s \geq 0$

Small-gain theorem for ISC systems

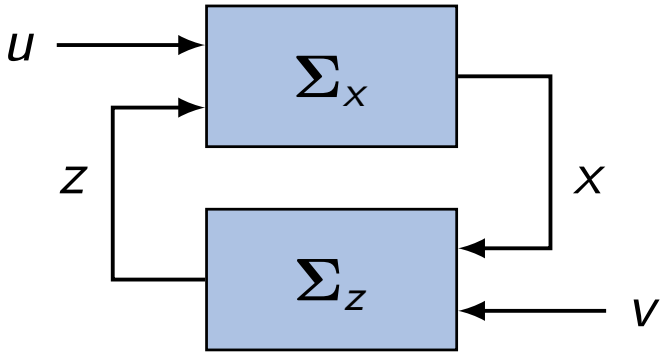

$\Sigma_x : \dot{x} = f(x, z, u)$ ISC with γ_{xz}, γ_{xu}

$\Sigma_z : \dot{z} = g(z, x, v)$ ISC with γ_{zx}, γ_{zv}

Theorem. The feedback interconnection is input-to-state convergent if there exist functions ρ_1, ρ_2 of class $\mathcal{K}_\infty$ such that

$$(\mathrm{id} + \rho_1) \circ \gamma_{xz} \circ (\mathrm{id} + \rho_2) \circ \gamma_{zx}(s) \leq s$$

holds for all $s \geq 0$

Ingredients of proof

1. Existence of a steady-state solution of the coupled system
2. Input-to-state stability with respect to the steady-state solution

Problem setting (cont'd.)

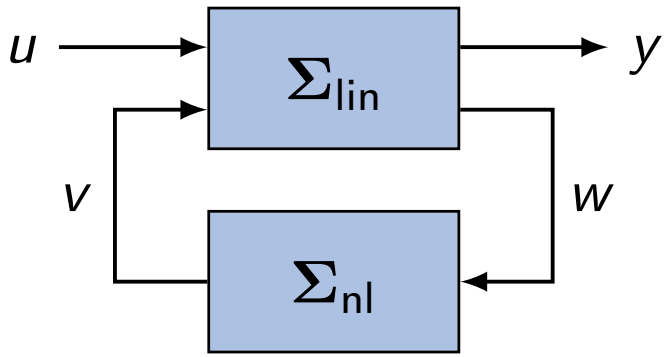

$$\Sigma_{\text{nl}} : \begin{cases} \dot{z} = g(z, w) \\ v = h(z) \end{cases}$$

Assumptions

A1. Σ_{lin} is asymptotically stable (i.e., input-to-state convergent)

Problem setting (cont'd.)

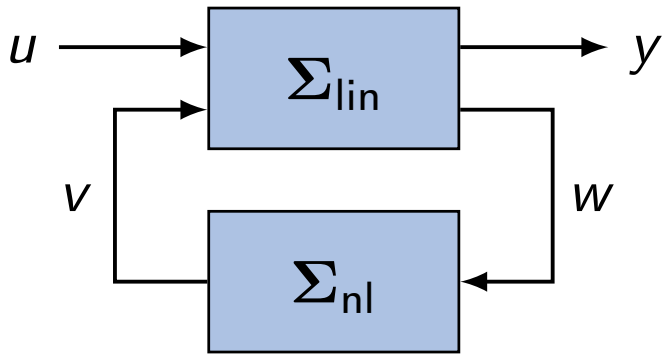

$$\Sigma_{\text{nl}} : \begin{cases} \dot{z} = g(z, w) \\ v = h(z) \end{cases}$$

Assumptions

A1. Σ_{lin} is asymptotically stable (i.e., input-to-state convergent)

A2. Σ_{nl} is input-to-state convergent

A3. The output function is incrementally bounded as

$$|h(z_2) - h(z_1)| \leq \chi_{vz}(|z_2 - z_1|)$$

Problem setting (cont'd.)

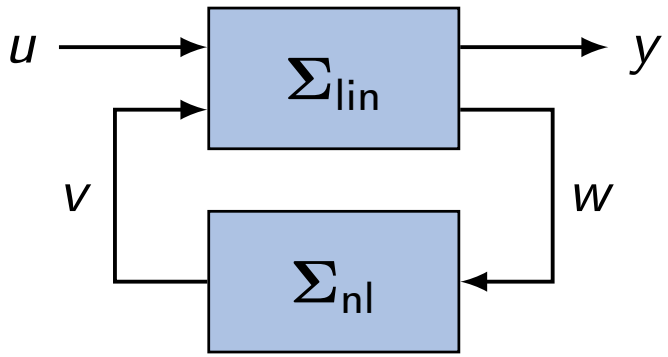

$$\Sigma_{\text{nl}} : \begin{cases} \dot{z} = g(z, w) \\ v = h(z) \end{cases}$$

Assumptions

A1. Σ_{lin} is asymptotically stable (i.e., input-to-state convergent)

A2. Σ_{nl} is input-to-state convergent

A3. The output function is incrementally bounded as

$$|h(z_2) - h(z_1)| \leq \chi_{vz}(|z_2 - z_1|)$$

Property. The steady-state output operator $\mathcal{G}_v w := h(\bar{z}_w)$ satisfies

$$\|\mathcal{G}_v w_2 - \mathcal{G}_v w_1\|_\infty \leq \chi_{vz} \circ \gamma_{zw}(\|w_2 - w_1\|_\infty)$$

Problem setting (cont'd.)

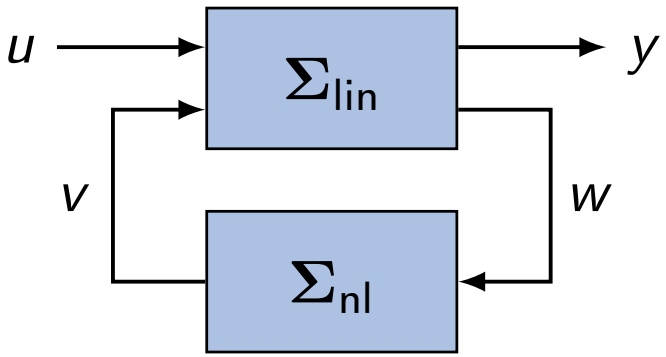

$$\Sigma_{\text{nl}} : \begin{cases} \dot{z} = g(z, w) \\ v = h(z) \end{cases}$$

Assumptions

A4. $\exists \rho_1,\ \rho_2 \in \mathcal{K}_\infty$ such that the small-gain condition

$$(\mathrm{id} + \rho_1) \circ \gamma_{xv} \circ \chi_{vz} \circ (\mathrm{id} + \rho_2) \circ \gamma_{zw} \circ \chi_{wx}(s) \leq s, \quad \forall s \geq 0$$

holds, i.e., $\Sigma = \mathcal{I}(\Sigma_{\text{lin}}, \Sigma_{\text{nl}})$ is input-to-state convergent

Problem setting (cont'd.)

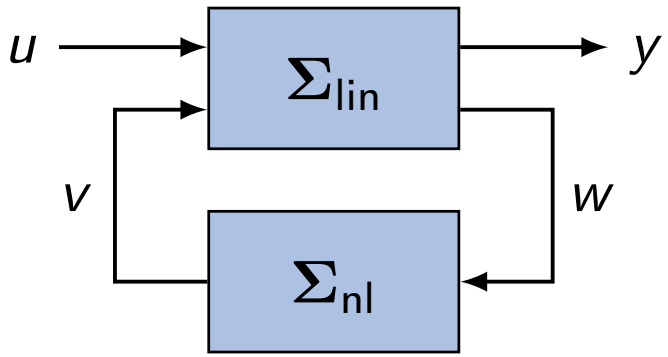

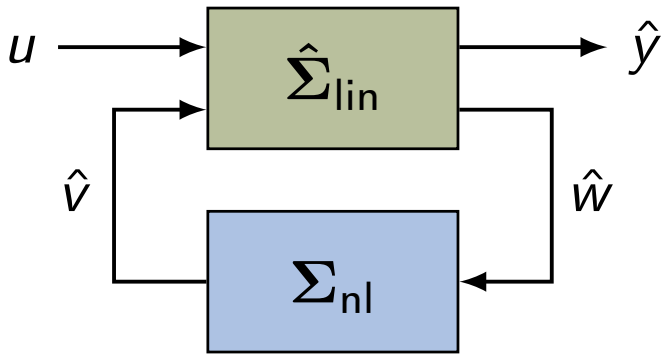

Assumptions

A5. $\hat{\Sigma}_{\text{lin}}$ is asymptotically stable

A6. The steady-state error operators $\mathcal{E}_i(u,v) = \mathcal{F}_i(u,v) - \hat{\mathcal{F}}_i(u,v)$ satisfy, for some $\varepsilon_{ij} \in \mathcal{K}_\infty$, $i \in \{y, w\}$, $j \in \{u, v\}$,

$$\|\mathcal{E}_i(u_2, v_2) - \mathcal{E}_i(u_1, v_1)\|_\infty \leq \varepsilon_{iu}\big(\|u_2 - u_1\|_\infty\big) + \varepsilon_{iv}\big(\|v_2 - v_1\|_\infty\big)$$

Problem setting (cont'd.)

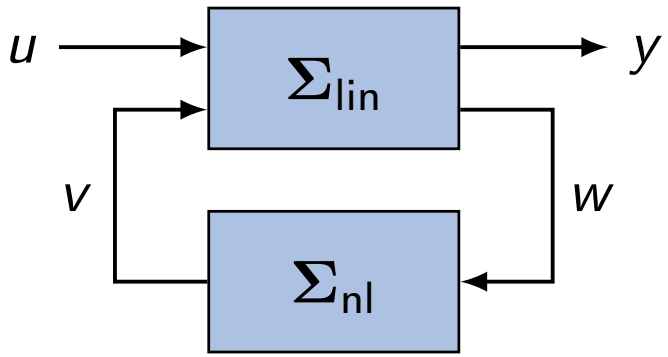

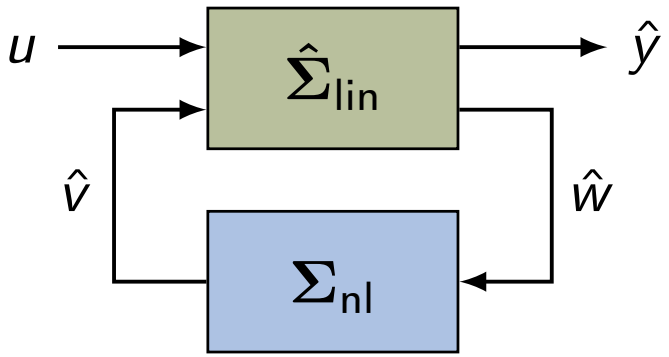

Assumptions

A5. $\hat{\Sigma}_{\text{lin}}$ is asymptotically stable

A6. The steady-state error operators $\mathcal{E}_i(u,v) = \mathcal{F}_i(u,v) - \hat{\mathcal{F}}_i(u,v)$ satisfy, for some $\varepsilon_{ij} \in \mathcal{K}_\infty$, $i \in \{y, w\}$, $j \in \{u, v\}$,

$$\|\mathcal{E}_i(u_2, v_2) - \mathcal{E}_i(u_1, v_1)\|_\infty \leq \varepsilon_{iu}\big(\|u_2 - u_1\|_\infty\big) + \varepsilon_{iv}\big(\|v_2 - v_1\|_\infty\big)$$

Linear model reduction techniques satisfying A5. and A6. exist, e.g., balanced truncation [Moore, Glover]

Stability preservation and error bound

Theorem. Let $\mathbf{\Sigma} = \mathcal{I}(\mathbf{\Sigma}_{\mathsf{lin}}, \mathbf{\Sigma}_{\mathsf{nl}})$ and $\hat{\mathbf{\Sigma}} = \mathcal{I}(\hat{\mathbf{\Sigma}}_{\mathsf{lin}}, \mathbf{\Sigma}_{\mathsf{nl}})$ satisfy Assumptions A1–A6. Then,

1. $\hat{\mathbf{\Sigma}}$ is input-to-state convergent if $\exists \hat{\rho}_1,\ \hat{\rho}_2 \in \mathcal{K}_\infty$ such that

$$(\mathrm{id} + \hat{\rho}_1) \circ \chi_{vz} \circ \gamma_{zw} \circ (\mathrm{id} + \hat{\rho}_2) \circ (\chi_{wx} \circ \gamma_{xv} + \varepsilon_{wv})(s) \leq s,$$

for all $s \geq 0$

Stability preservation and error bound

Theorem. Let $\boldsymbol{\Sigma} = \mathcal{I}(\boldsymbol{\Sigma}_{\text{lin}}, \boldsymbol{\Sigma}_{\text{nl}})$ and $\hat{\boldsymbol{\Sigma}} = \mathcal{I}(\hat{\boldsymbol{\Sigma}}_{\text{lin}}, \boldsymbol{\Sigma}_{\text{nl}})$ satisfy Assumptions A1–A6. Then,

1. $\hat{\boldsymbol{\Sigma}}$ is input-to-state convergent if $\exists \hat{\rho}_1,\, \hat{\rho}_2 \in \mathcal{K}_\infty$ such that

$$(\mathrm{id} + \hat{\rho}_1) \circ \chi_{vz} \circ \gamma_{zw} \circ (\mathrm{id} + \hat{\rho}_2) \circ (\chi_{wx} \circ \gamma_{xv} + \varepsilon_{wv})(s) \leq s,$$

   for all $s \geq 0$

2. If 1. is satisfied, then there exists $\varepsilon \in \mathcal{K}_\infty$ such that the **steady-state** output error is bounded as

$$\|\delta \bar{y}_u\|_\infty \leq \varepsilon\big(\|u\|_\infty\big),$$

   with $\delta \bar{y}_u := \bar{y}_u - \bar{\hat{y}}_u$. Moreover, $\varepsilon(\cdot)$ can be expressed in terms of the incremental gains of $\boldsymbol{\Sigma}_{\text{lin}}$ and $\boldsymbol{\Sigma}_{\text{nl}}$ and the error bound on the linear subsystems ε_{ij}

Proof and properties

Ingredients in the proof

- Input-to-state convergence provides bound on amplifications of steady-state errors going through the subsystems
- Small-gain theorem provides boundedness of steady-state errors in closed-loop

Proof and properties

Ingredients in the proof

- Input-to-state convergence provides bound on amplifications of steady-state errors going through the subsystems
- Small-gain theorem provides boundedness of steady-state errors in closed-loop

Properties

- Preservation of input-to-state stability

Proof and properties

Ingredients in the proof

- Input-to-state convergence provides bound on amplifications of steady-state errors going through the subsystems
- Small-gain theorem provides boundedness of steady-state errors in closed-loop

Properties

- Preservation of input-to-state stability
- Bound on the **steady-state** error. Recall that the steady-state solution is 1. defined for any bounded input, and, 2. unique

Proof and properties

Ingredients in the proof

- Input-to-state convergence provides bound on amplifications of steady-state errors going through the subsystems
- Small-gain theorem provides boundedness of steady-state errors in closed-loop

Properties

- Preservation of input-to-state stability
- Bound on the **steady-state** error. Recall that the steady-state solution is 1. defined for any bounded input, and, 2. unique
- **A priori** error bound, i.e., based only on properties of Σ

Proof and properties

Ingredients in the proof

- Input-to-state convergence provides bound on amplifications of steady-state errors going through the subsystems
- Small-gain theorem provides boundedness of steady-state errors in closed-loop

Properties

- Preservation of input-to-state stability
- Bound on the **steady-state** error. Recall that the steady-state solution is 1. defined for any bounded input, and, 2. unique
- **A priori** error bound, i.e., based only on properties of $\boldsymbol{\Sigma}$
- Error bound holds for all nonlinear systems $\boldsymbol{\Sigma}_{\mathrm{nl}}$ satisfying the same input-to-state convergence gains

Incremental $\mathcal{L}_2$ gain and passivity

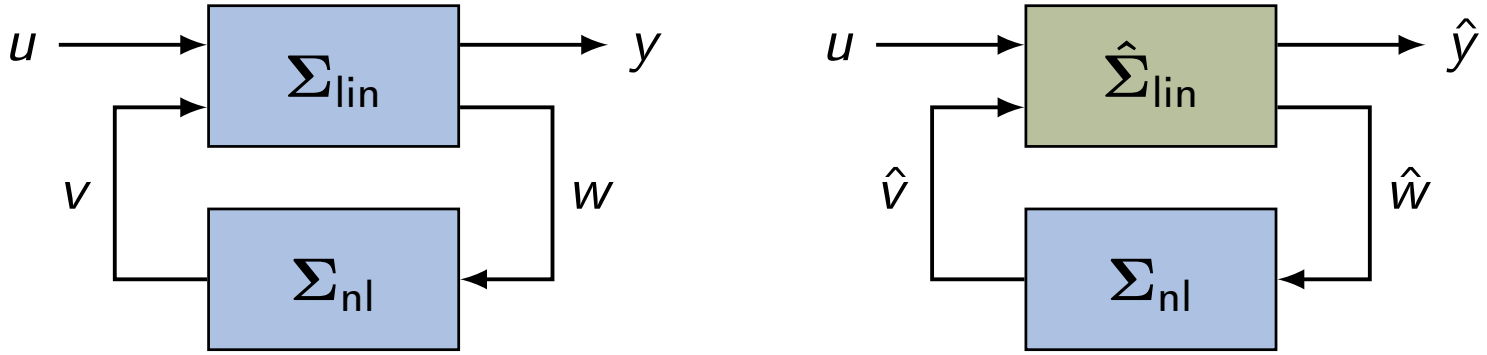

Incremental properties (by input-to-state convergence) of Σ_{nl} crucial in obtaining the (a priori) error bound

Incremental $\mathcal{L}_2$ gain and passivity

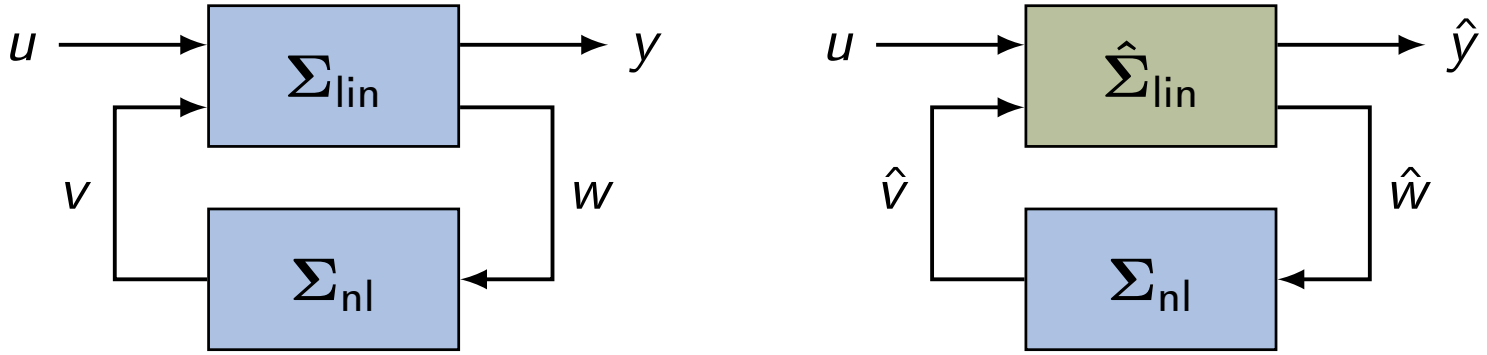

Incremental properties (by input-to-state convergence) of Σ_{nl} crucial in obtaining the (a priori) error bound

Alternative system classes (using dissipativity theory [Willems])

1. Incremental $\mathcal{L}_2$ gain [Romanchuk & James]. A system Σ_{nl} has a bounded incremental $\mathcal{L}_2$ gain if $\exists$ a function S such that

$$\dot{S}(x_2, x_1) \leq \gamma^2 |u_2 - u_1|^2 - |y_2 - y_1|^2$$

Incremental $\mathcal{L}_2$ gain and passivity

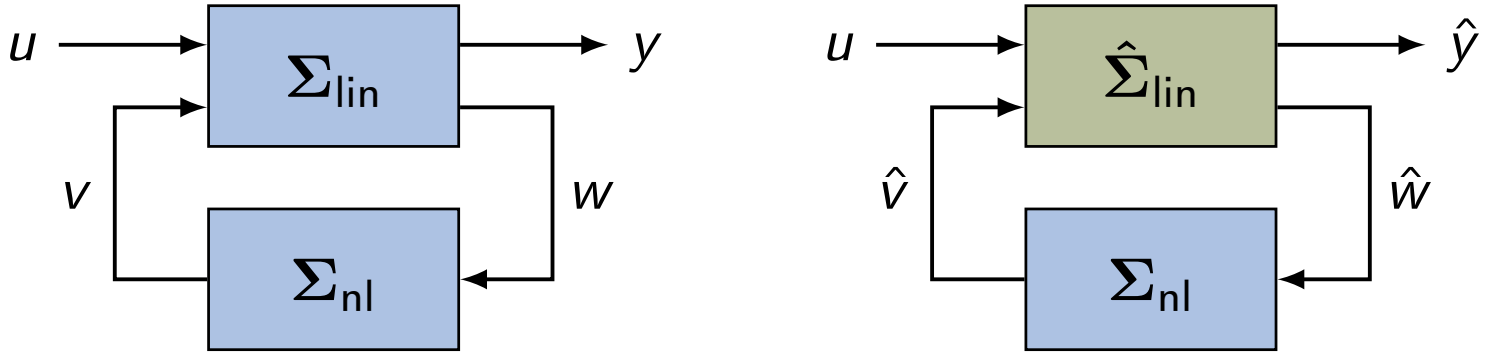

Incremental properties (by input-to-state convergence) of Σ_{nl} crucial in obtaining the (a priori) error bound

Alternative system classes (using dissipativity theory [Willems])

2. Incremental passivity [Pavlov & Marconi]. A system Σ_{nl} is incrementally passive if $\exists$ a storage function S such that

$$\dot{S}(x_2, x_1) \leq (u_2 - u_1)^{\mathrm{T}}(y_2 - y_1)$$

Incremental $\mathcal{L}_2$ gain and passivity

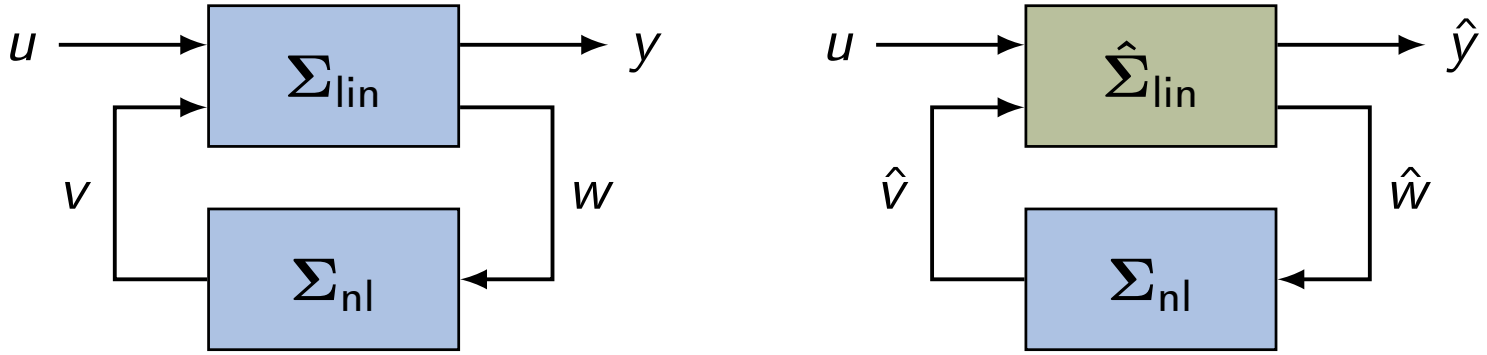

Incremental properties (by input-to-state convergence) of Σ_{nl} crucial in obtaining the (a priori) error bound

Alternative system classes (using dissipativity theory [Willems])

- **Approach**: bounded real [Opdenacker & Jonckheere] or positive real [Desai & Pal, Harshavarhana et al.] balancing of Σ_{lin}
- **Properties**: preservation of bounded $\mathcal{L}_2$ gain or passivity through small-gain or passivity theorem and a priori error bound due to incremental properties [Besselink et al., 2013]

Example

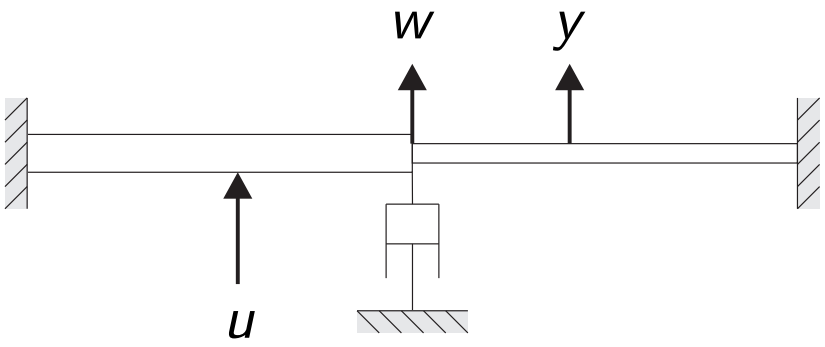

Nonlinear beam example

- Linear beam model using Euler beam elements
- Nonlinear damping characteristic (damping force v)

$$\Sigma_{\text{nl}} : \begin{cases} \dot{z} = -z - \sigma(z) + \kappa w \\ v = z \end{cases}$$

with $\sigma(z)$ an arbitrary nondecreasing continuous function

Example

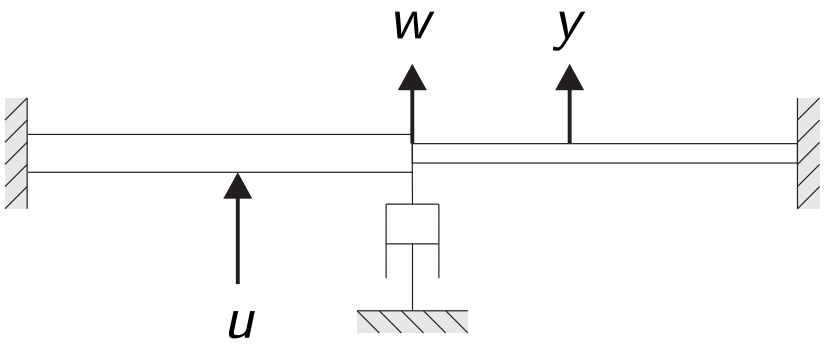

Nonlinear beam example

- Linear beam model using Euler beam elements
- Nonlinear damping characteristic (damping force v)

$$\Sigma_{\text{nl}} : \begin{cases} \dot{z} = -z - \sigma(z) + \kappa w \\ v = z \end{cases}$$

with $\sigma(z)$ an arbitrary nondecreasing continuous function

Σ_{nl} has a bounded incremental $\mathcal{L}_2$ gain with gain κ, i.e. $\mu = \kappa$

Example: results (1)

Reduction of Σ_{lin} ($n = 80$) to obtain $\hat{\Sigma}_{\text{lin}}$ of order $k = 4$ for $\kappa = 20$

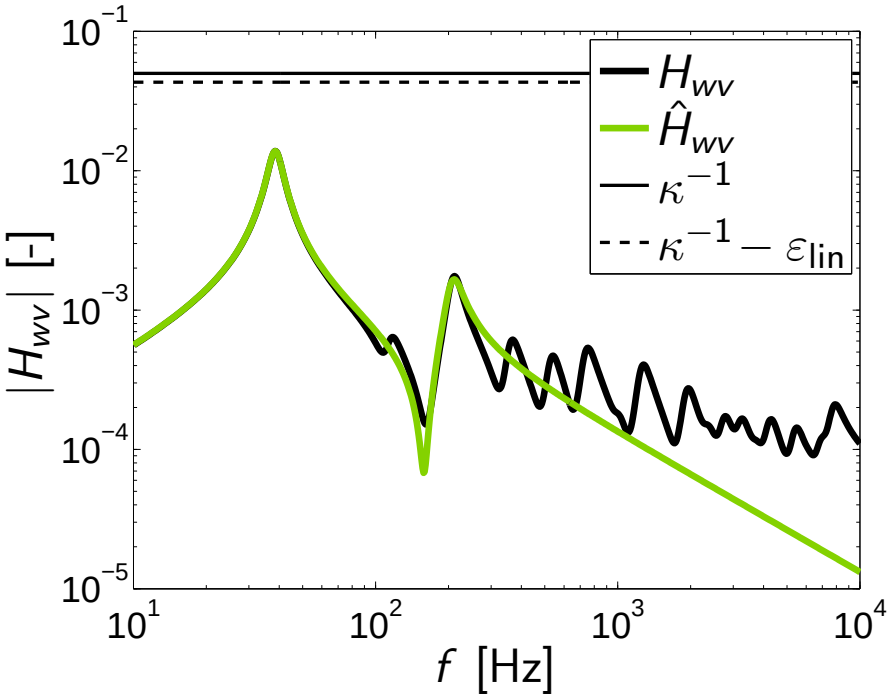

κ	ε (a priori)	ε (a posteriori)
20	$0.903 \cdot 10^{-2}$	$0.530 \cdot 10^{-5}$

Example: results (1)

Reduction of Σ_{lin} ($n = 80$) to obtain $\hat{\Sigma}_{\text{lin}}$ of order $k = 4$ for $\kappa = 40$

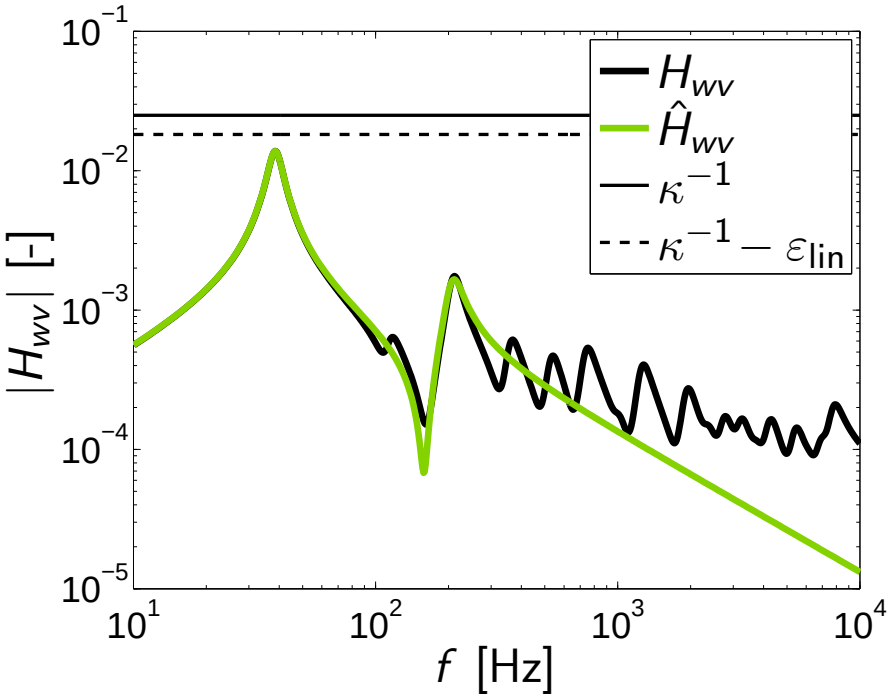

κ	ε (a priori)	ε (a posteriori)
20	$0.903 \cdot 10^{-2}$	$0.530 \cdot 10^{-5}$
40	$1.406 \cdot 10^{-2}$	$0.658 \cdot 10^{-5}$

Example: results (1)

Reduction of Σ_{lin} ($n = 80$) to obtain $\hat{\Sigma}_{\text{lin}}$ of order $k = 4$ for $\kappa = 60$

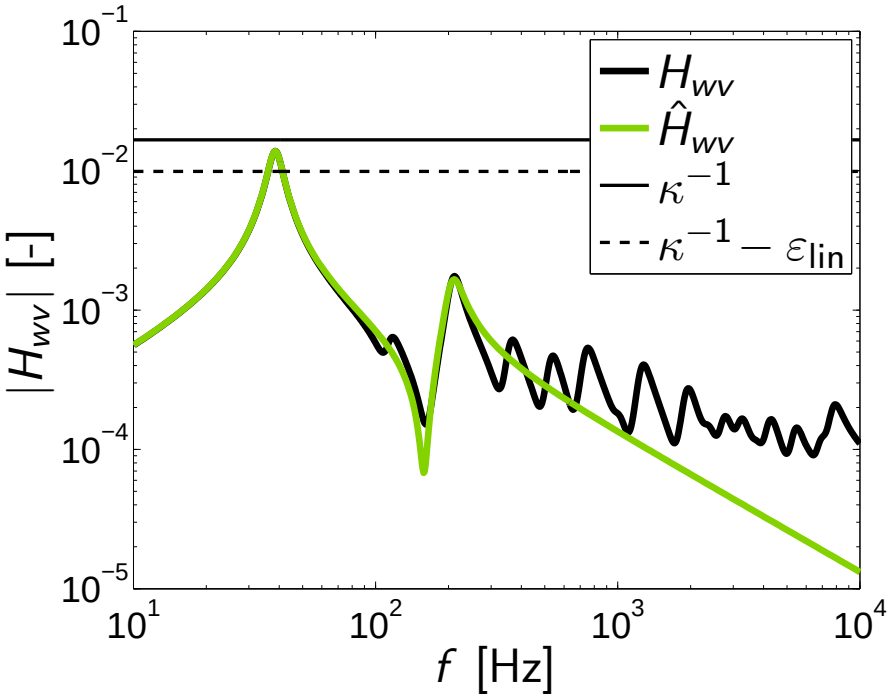

κ	ε (a priori)	ε (a posteriori)
20	$0.903 \cdot 10^{-2}$	$0.530 \cdot 10^{-5}$
40	$1.406 \cdot 10^{-2}$	$0.658 \cdot 10^{-5}$
60	–	$1.239 \cdot 10^{-5}$

Example: results (2)

Simulation of Σ and $\hat{\Sigma}$ for $u(t) = 10^2 \operatorname{sign}(\sin(2\pi 10 t))$ and $\kappa = 60$

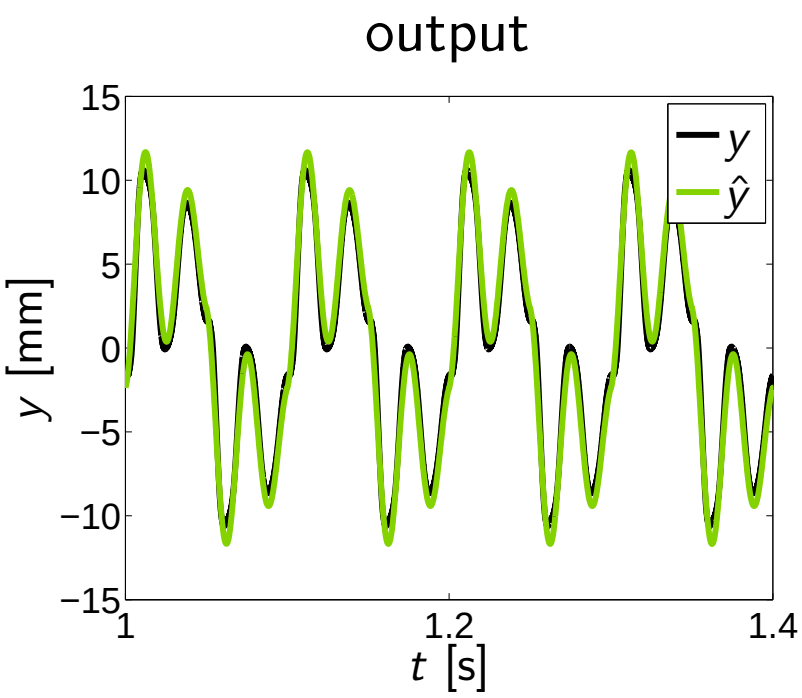

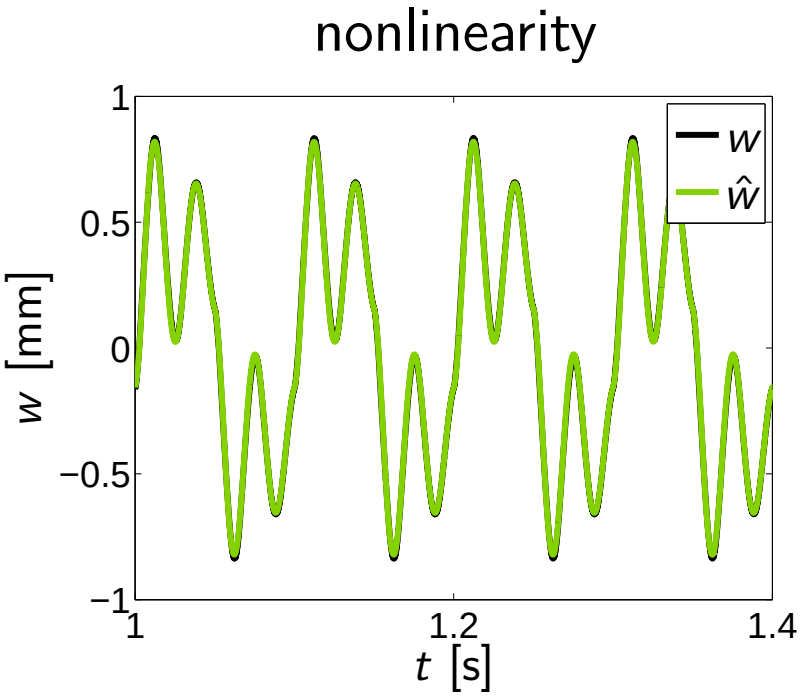

Overview & Incremental balancing

Overview. Model reduction for ...

1. input-to-state convergent systems
2. systems with incremental dissipativity properties

Overview & Incremental balancing

Overview. Model reduction for ...

1. input-to-state convergent systems
2. systems with incremental dissipativity properties

Properties

- Preservation of system properties and a priori error bound
- Computationally attractive
- Nonlinearity not explicitly taken into account

References

- B. Besselink, N. van de Wouw, H. Nijmeijer. Model reduction for a class of convergent nonlinear systems. *IEEE Transactions on Automatic Control*, 57(4):1071–1076, 2012.
- B. Besselink, N. van de Wouw, H. Nijmeijer. Model reduction for nonlinear systems with incremental gain or passivity properties. *Automatica*, 49(4):861–872, 2013.
- N. van de Wouw, W. Michiels, B. Besselink. Model reduction for delay differential equations with guaranteed stability and error bound. *Automatica*, 55:132–139, 2015.

Overview & Incremental balancing

Overview. Model reduction for ...

1. input-to-state convergent systems
2. systems with incremental dissipativity properties

Properties

- Preservation of system properties and a priori error bound
- Computationally attractive
- Nonlinearity not explicitly taken into account

Objective. Incorporate nonlinearities in the reduction procedure

Overview & Incremental balancing

Overview. Model reduction for ...

1. input-to-state convergent systems
2. systems with incremental dissipativity properties

Properties

- Preservation of system properties and a priori error bound
- Computationally attractive
- Nonlinearity not explicitly taken into account

Objective. Incorporate nonlinearities in the reduction procedure

Incremental balanced truncation for models of the form

$$\boldsymbol{\Sigma} : \begin{cases} \dot{x} = f(x) + g(x)u, & x \in \mathbb{R}^n, u \in \mathbb{R}^m, y \in \mathbb{R}^p \\ y = h(x) \end{cases}$$

Balanced truncation

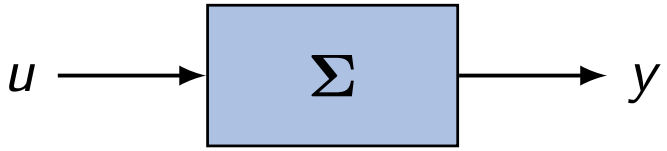

Observability and controllability function

$$L_o(x_0) = \int_0^\infty |y(t)|^2 \, \mathrm{d}t, \quad x(0) = x_0, u = 0$$

$$L_c(x_0) = \inf_{u \in \mathcal{L}_2^m} \int_{-\infty}^0 |u(t)|^2 \, \mathrm{d}t, \quad u : x(-\infty) = 0 \rightsquigarrow x(0) = x_0$$

Balanced truncation

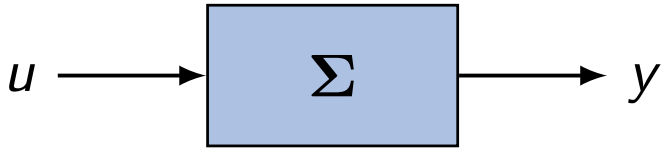

Observability and controllability function

$$L_o(x_0) = \int_0^\infty |y(t)|^2 \, \mathrm{d}t, \quad x(0) = x_0, u = 0$$

$$L_c(x_0) = \inf_{u \in \mathcal{L}_2^m} \int_{-\infty}^0 |u(t)|^2 \, \mathrm{d}t, \quad u : x(-\infty) = 0 \rightsquigarrow x(0) = x_0$$

Linear systems (asymptotically stable)

$$L_o(x) = x^{\mathrm{T}} Q x, \quad L_c(x) = x^{\mathrm{T}} P^{-1} x$$

1. **Balancing**: find transformation $x = Tz$ such that $L_o(z) = z^{\mathrm{T}} \Sigma z$, $L_c(z) = z^{\mathrm{T}} \Sigma^{-1} z$ with $\Sigma = \mathrm{diag}\{\sigma_1, \ldots, \sigma_n\}$
2. **Truncation**: discard states corresponding to smallest σ_i's

Balanced truncation

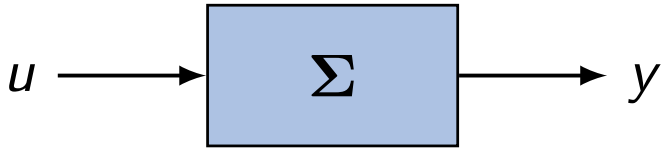

Observability and controllability function

$$L_o(x_0) = \int_0^\infty |y(t)|^2 \, \mathrm{d}t, \quad x(0) = x_0, u = 0$$

$$L_c(x_0) = \inf_{u \in \mathcal{L}_2^m} \int_{-\infty}^0 |u(t)|^2 \, \mathrm{d}t, \quad u : x(-\infty) = 0 \rightsquigarrow x(0) = x_0$$

Linear systems (asymptotically stable)

- Preservation of asymptotic stability (when $\sigma_k > \sigma_{k+1}$)
- A priori error bound of the form $\|y - \hat{y}\|_2 \leq \varepsilon \|u\|_2$ with

$$\varepsilon = 2 \sum_{i=k+1}^{n} \sigma_i$$

Balanced truncation

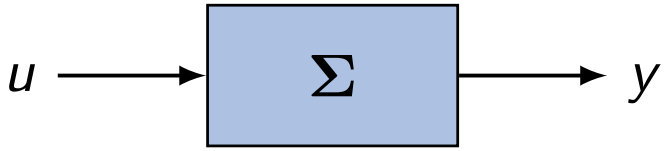

Observability and controllability function

$$L_o(x_0) = \int_0^\infty |y(t)|^2 \, \mathrm{d}t, \quad x(0) = x_0, u = 0$$

$$L_c(x_0) = \inf_{u \in \mathcal{L}_2^m} \int_{-\infty}^0 |u(t)|^2 \, \mathrm{d}t, \quad u : x(-\infty) = 0 \rightsquigarrow x(0) = x_0$$

Nonlinear systems

- Extension to nonlinear systems exist [Scherpen, Fujimoto]
- Preservation of local asymp. stability of $x = 0$ for $u = 0$
- No error bound

Incremental observability function

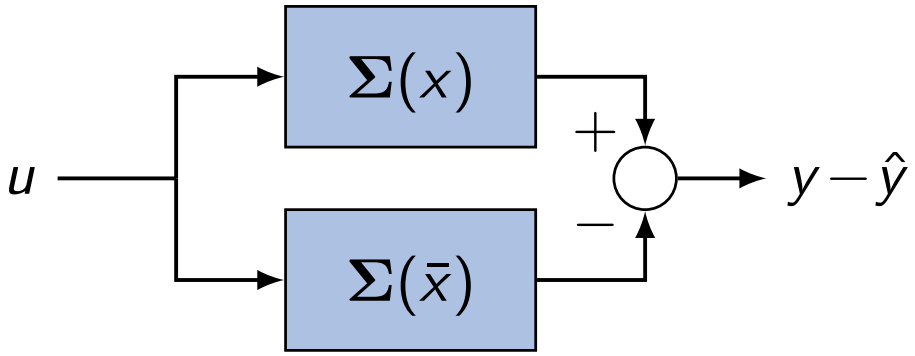

$$E_o(x_0, \bar{x}_0) = \sup_{u \in \mathcal{L}_2^m} \int_0^\infty |y(t) - \bar{y}(t)|^2 \, \mathrm{d}t, \quad x(0) = x_0, \; \bar{x}(0) = \bar{x}_0$$

Incremental observability function

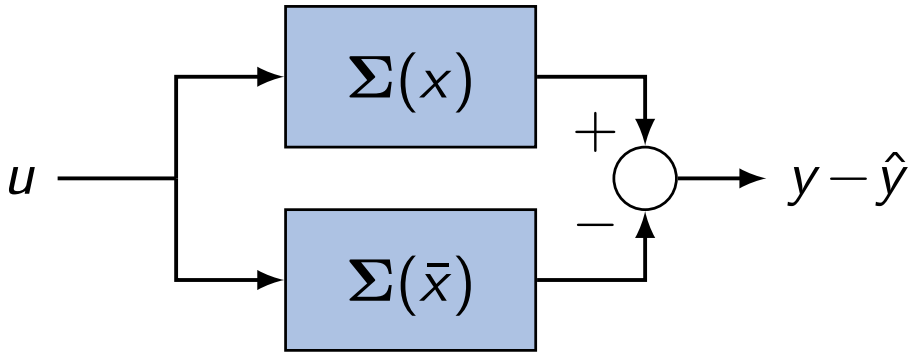

$$E_o(x_0, \bar{x}_0) = \sup_{u \in \mathcal{L}_2^m} \int_0^\infty |y(t) - \bar{y}(t)|^2 \, \mathrm{d}t, \quad x(0) = x_0, \; \bar{x}(0) = \bar{x}_0$$

Properties

- Σ is observable if and only if $E_o(x_0, \bar{x}_0) > 0$ for all $x_0 \neq \bar{x}_0$

Incremental observability function

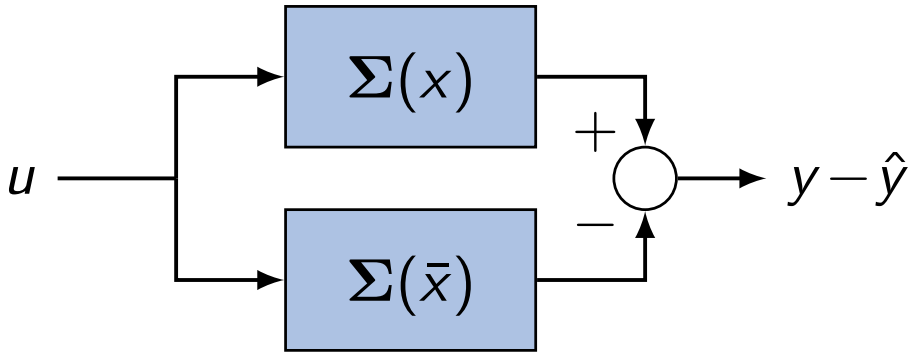

$$E_o(x_0, \bar{x}_0) = \sup_{u \in \mathcal{L}_2^m} \int_0^\infty |y(t) - \bar{y}(t)|^2 \, \mathrm{d}t, \quad x(0) = x_0, \ \bar{x}(0) = \bar{x}_0$$

Properties

- Σ is observable if and only if $E_o(x_0, \bar{x}_0) > 0$ for all $x_0 \neq \bar{x}_0$
- Related to incremental stability properties, i.e., if $E_o(x_0, \bar{x}_0) > 0$ for all $x_0 \neq \bar{x}_0$, then any two trajectories $x(\cdot)$ and $\bar{x}(\cdot)$ for a common input $u(\cdot)$ satisfy

$$|x(t) - \bar{x}(t)| \leq \alpha(|x(0) - \bar{x}(0)|), \quad \forall t \geq 0, \ \alpha \in \mathcal{K}$$

Incremental observability function

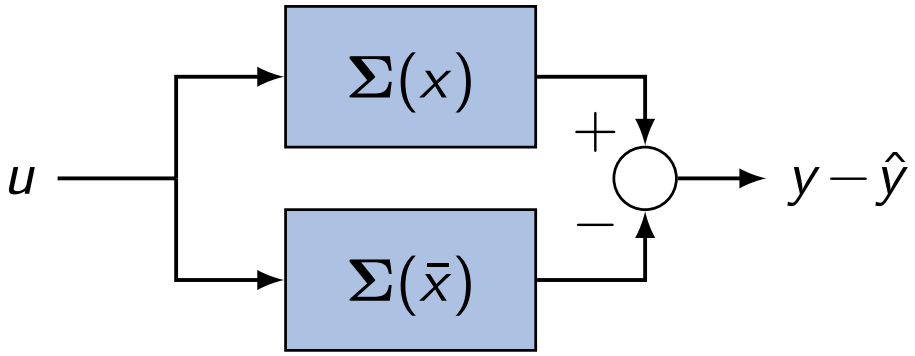

$$E_o(x_0, \bar{x}_0) = \sup_{u \in \mathcal{L}_2^m} \int_0^\infty |y(t) - \bar{y}(t)|^2 \, \mathrm{d}t, \quad x(0) = x_0, \; \bar{x}(0) = \bar{x}_0$$

Properties

- Σ is observable if and only if $E_o(x_0, \bar{x}_0) > 0$ for all $x_0 \neq \bar{x}_0$
- Related to incremental stability properties

- **Linear systems**

$$E_o(x_0, \bar{x}_0) = (x_0 - \bar{x}_0)^{\mathrm{T}} Q (x_0 - \bar{x}_0) = L_o(x_0 - \bar{x}_0)$$

Incremental controllability function

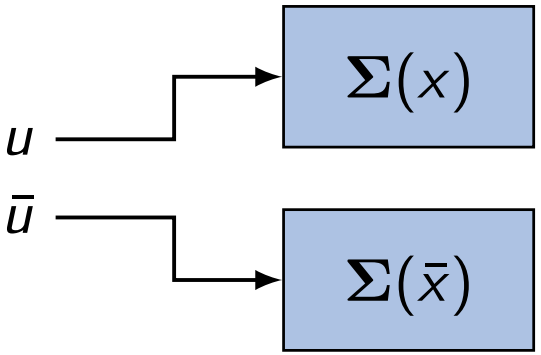

$$E_c(x_0, \bar{x}_0) = \inf_{u, \bar{u} \in \mathcal{L}_2^m} \int_{-\infty}^{0} |u(t) + \bar{u}(t)|^2 \, \mathrm{d}t, \quad u : 0 \rightsquigarrow x_0, \ \bar{u} : 0 \rightsquigarrow \bar{x}_0$$

Incremental controllability function

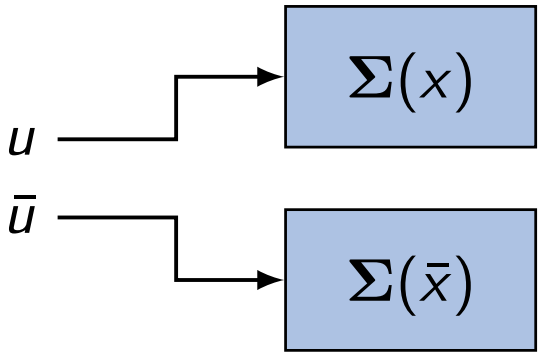

$$E_c(x_0, \bar{x}_0) = \inf_{u,\bar{u}\in\mathcal{L}_2^m} \int_{-\infty}^{0} |u(t) + \bar{u}(t)|^2 \, \mathrm{d}t, \quad u : 0 \rightsquigarrow x_0, \ \bar{u} : 0 \rightsquigarrow \bar{x}_0$$

Properties

- Related to reachability of Σ
- Related to boundedness of solutions (i.e., stability)

Incremental controllability function

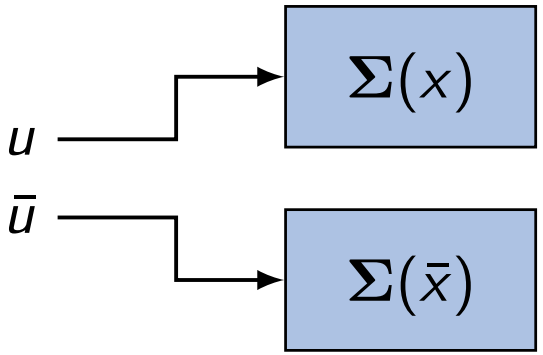

$$E_c(x_0, \bar{x}_0) = \inf_{u,\bar{u}\in\mathcal{L}_2^m} \int_{-\infty}^{0} |u(t) + \bar{u}(t)|^2 \, \mathrm{d}t, \quad u : 0 \rightsquigarrow x_0, \ \bar{u} : 0 \rightsquigarrow \bar{x}_0$$

Properties

- Related to reachability of Σ
- Related to boundedness of solutions (i.e., stability)

- **Linear systems**

$$E_c(x_0, \bar{x}_0) = (x_0 + \bar{x}_0)^{\mathrm{T}} P^{-1} (x_0 + \bar{x}_0) = L_c(x_0 + \bar{x}_0)$$

Incremental balancing

Assumption

1. E_o and E_c can be partitioned as

$$E_o(x, \bar{x}) = E_o^1(x_1, \bar{x}_1) + E_o^2(x_2, \bar{x}_2)$$
$$E_c(x, \bar{x}) = E_c^1(x_1, \bar{x}_1) + E_c^2(x_2, \bar{x}_2)$$

   with $x^{\mathrm{T}} = [\, x_1^{\mathrm{T}} \;\; x_2 \,]$, $\bar{x}^{\mathrm{T}} = [\, \bar{x}_1^{\mathrm{T}} \;\; \bar{x}_2 \,]$

2. E_o^2 and E_c^2 satisfy, for some $\rho > 0$,

$$\frac{\partial E_o^2}{\partial \bar{x}_2}(x_2, 0) = -\rho^2 \frac{\partial E_c^2}{\partial \bar{x}_2}(x_2, 0)$$

Incremental balancing

Assumption

1. E_o and E_c can be partitioned as

$$E_o(x, \bar{x}) = E_o^1(x_1, \bar{x}_1) + E_o^2(x_2, \bar{x}_2)$$
$$E_c(x, \bar{x}) = E_c^1(x_1, \bar{x}_1) + E_c^2(x_2, \bar{x}_2)$$

   with $x^{\mathrm{T}} = [\, x_1^{\mathrm{T}} \;\; x_2 \,]$, $\bar{x}^{\mathrm{T}} = [\, \bar{x}_1^{\mathrm{T}} \;\; \bar{x}_2 \,]$

2. E_o^2 and E_c^2 satisfy, for some $\rho > 0$,

$$\frac{\partial E_o^2}{\partial \bar{x}_2}(x_2, 0) = -\rho^2 \frac{\partial E_c^2}{\partial \bar{x}_2}(x_2, 0)$$

Linear systems: the assumption is satisfied if the system is in balanced coordinates (then, $Q = P = \Sigma$ and $\rho = \sigma_n$)

Incremental balancing

Assumption

1. E_o and E_c can be partitioned as

$$E_o(x,\bar{x}) = E_o^1(x_1,\bar{x}_1) + E_o^2(x_2,\bar{x}_2)$$
$$E_c(x,\bar{x}) = E_c^1(x_1,\bar{x}_1) + E_c^2(x_2,\bar{x}_2)$$

   with $x^{\mathrm{T}} = [\, x_1^{\mathrm{T}} \;\; x_2 \,]$, $\bar{x}^{\mathrm{T}} = [\, \bar{x}_1^{\mathrm{T}} \;\; \bar{x}_2 \,]$

2. E_o^2 and E_c^2 satisfy, for some $\rho > 0$,

$$\frac{\partial E_o^2}{\partial \bar{x}_2}(x_2,0) = -\rho^2 \frac{\partial E_c^2}{\partial \bar{x}_2}(x_2,0)$$

Interpretation

- Existence of an "incrementally balanced" realization
- Can a coordinate transformation $x = \varphi(z)$ be found such that the assumption holds in the new coordinates z?

Incremental balanced truncation

Partitioning in "incrementally balanced" form

$$\boldsymbol{\Sigma} : \begin{cases} \dot{x}_1 = f_1(x_1, x_2) + g_1(x_1, x_2)u \\ \dot{x}_2 = f_2(x_1, x_2) + g_2(x_1, x_2)u \\ y = h(x_1, x_2) \end{cases}$$

Incremental balanced truncation

Partitioning in "incrementally balanced" form

$$\Sigma : \begin{cases} \dot{x}_1 = f_1(x_1, x_2) + g_1(x_1, x_2)u \\ \dot{x}_2 = f_2(x_1, x_2) + g_2(x_1, x_2)u \\ y = h(x_1, x_2) \end{cases}$$

Truncation, i.e., set $x_2 = 0$ and discard x_2-dynamics

$$\hat{\Sigma}_{n-1} : \begin{cases} \dot{\xi} = f_1(\xi, 0) + g_1(\xi, 0)u \\ \hat{y} = h(\xi, 0) \end{cases}$$

- One-step reduction
- $\xi \in \mathbb{R}^{n-1}$ approximates x_1

Incremental balanced truncation

Partitioning in "incrementally balanced" form

$$\Sigma : \begin{cases} \dot{x}_1 = f_1(x_1, x_2) + g_1(x_1, x_2)u \\ \dot{x}_2 = f_2(x_1, x_2) + g_2(x_1, x_2)u \\ y = h(x_1, x_2) \end{cases}$$

Truncation, i.e., set $x_2 = 0$ and discard x_2-dynamics

$$\hat{\Sigma}_{n-1} : \begin{cases} \dot{\xi} = f_1(\xi, 0) + g_1(\xi, 0)u \\ \hat{y} = h(\xi, 0) \end{cases}$$

- One-step reduction
- $\xi \in \mathbb{R}^{n-1}$ approximates x_1

Lemma. $\hat{E}_o$ and $\hat{E}_c$ of $\hat{\Sigma}_{n-1}$ satisfy the bounds

$$\hat{E}_o(\xi, \bar{\xi}) \leq E_o^1(\xi, \bar{\xi}), \qquad \hat{E}_c(\xi, \bar{\xi}) \geq E_c^1(\xi, \bar{\xi})$$

Stability preservation

Theorem. Let $E_o(x, \bar{x}) > 0$ for all $x \neq \bar{x}$ and $E_c(x, x) > 0$ for all $x \neq 0$. Under the assumptions stated before

1. There exists $\hat{\mathcal{X}} \subseteq \mathbb{R}^{n-1}$ and $\mathcal{U} \subseteq \mathcal{L}_2^m([0, \infty))$ such that any $\xi(\cdot)$ corresponding to $\xi(0) \in \hat{\mathcal{X}}$ and $u(\cdot) \in \mathcal{U}$ is bounded

2. $\hat{\Sigma}_{n-1}$ is incrementally stable, i.e.,
$$|\xi(t) - \bar{\xi}(t)| \leq \alpha(|\xi(0) - \bar{\xi}(0)|), \quad \forall t \geq 0$$
with $\xi(\cdot)$ and $\bar{\xi}(\cdot)$ solutions to $\xi(0)$ and $\bar{\xi}(0)$ and input $u(\cdot)$

3. For any bounded input $u(\cdot) \in \mathcal{L}_2^m([0, \infty))$,
$$\lim_{t \to \infty} \left| h(\xi(t), 0) - h(\bar{\xi}(t), 0) \right| = 0$$

Error bound

Theorem. Under the assumptions as before, the error bound

$$\|y - \hat{y}\|_2 \leq 2\rho\|u\|_2$$

holds for any $u(\cdot) \in \mathcal{L}_2^m([0, \infty))$ and zero initial conditions

Error bound

Theorem. Under the assumptions as before, the error bound

$$\|y - \hat{y}\|_2 \leq 2\rho\|u\|_2$$

holds for any $u(\cdot) \in \mathcal{L}_2^m([0,\infty))$ and zero initial conditions

Proof based on the storage function

$$V(x_1, x_2, \xi) = E_o^1(x_1, \xi) + E_o^2(x_2, 0) + \rho^2\big(E_c^1(x_1, \xi) + E_c^2(x_2, 0)\big),$$

which satisfies

$$\dot{V}(x_1, x_2, \xi) \leq (2\rho)^2|u|^2 - |y - \hat{y}|^2$$

Error bound

Theorem. Under the assumptions as before, the error bound

$$\|y - \hat{y}\|_2 \leq 2\rho\|u\|_2$$

holds for any $u(\cdot) \in \mathcal{L}_2^m([0,\infty))$ and zero initial conditions

Proof based on the storage function

$$V(x_1, x_2, \xi) = E_o^1(x_1, \xi) + E_o^2(x_2, 0) + \rho^2\big(E_c^1(x_1, \xi) + E_c^2(x_2, 0)\big),$$

which satisfies

$$\dot{V}(x_1, x_2, \xi) \leq (2\rho)^2|u|^2 - |y - \hat{y}|^2$$

Remarks

- Reduction to arbitrary order by repeated application
- For linear systems, incremental balanced truncation is equivalent to balanced truncation

Generalized incremental balancing

Open problems

- Computation of E_o and E_c demanding
- Assumption on "incrementally balanced form" needed

Generalized incremental balancing

Open problems

- Computation of E_o and E_c demanding
- Assumption on "incrementally balanced form" needed

Generalized incremental energy functions

$$\tilde{E}_o(x, \bar{x}) = (x - \bar{x})^{\mathrm{T}} \tilde{Q}(x - \bar{x}) \geq E_o(x, \bar{x})$$
$$\tilde{E}_c(x, \bar{x}) = (x + \bar{x})^{\mathrm{T}} \tilde{R}(x + \bar{x}) \leq E_c(x, \bar{x})$$

Generalized incremental balancing

Open problems

- Computation of E_o and E_c demanding
- Assumption on "incrementally balanced form" needed

Generalized incremental energy functions

$$\tilde{E}_o(x, \bar{x}) = (x - \bar{x})^{\mathrm{T}} \tilde{Q}(x - \bar{x}) \geq E_o(x, \bar{x})$$
$$\tilde{E}_c(x, \bar{x}) = (x + \bar{x})^{\mathrm{T}} \tilde{R}(x + \bar{x}) \leq E_c(x, \bar{x})$$

Properties

- Use generalized incremental energy functions (i.e., bounds)
- Results on stability and error bound hold

Generalized incremental balancing

Open problems

- Computation of E_o and E_c demanding
- Assumption on "incrementally balanced form" needed

Generalized incremental energy functions

$$\tilde{E}_o(x,\bar{x}) = (x-\bar{x})^{\mathrm{T}}\tilde{Q}(x-\bar{x}) \geq E_o(x,\bar{x})$$
$$\tilde{E}_c(x,\bar{x}) = (x+\bar{x})^{\mathrm{T}}\tilde{R}(x+\bar{x}) \leq E_c(x,\bar{x})$$

Properties

- Use generalized incremental energy functions (i.e., bounds)
- Results on stability and error bound hold

Generalized incremental balanced truncation provides a computationally feasible approach towards model reduction

Example: Nonlinear electronic circuit

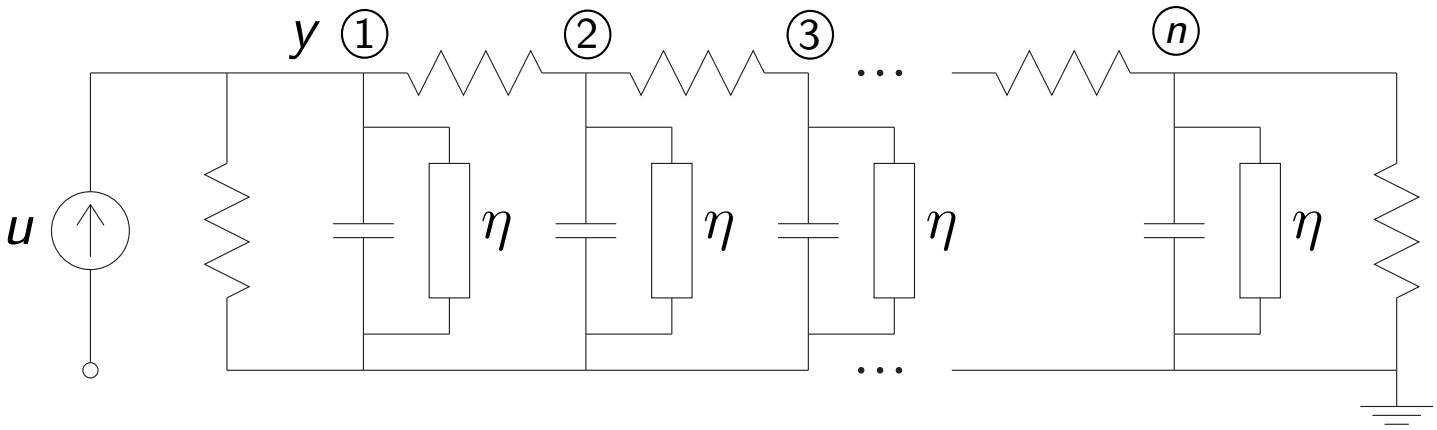

Nonlinear electronic circuit (taken from [Rewieński])

- Nonlinear resistors η with η odd, nondecreasing and $\eta(0) = 0$
- Model $\boldsymbol{\Sigma}$ with $f(x) = Ax + \varphi(x)$, $g(x) = B$, $h(x) = Cx$, and

$$A = \begin{bmatrix} -2 & 1 & & & 0 \\ 1 & -2 & \ddots & & \\ & \ddots & \ddots & \ddots & \\ & & \ddots & -2 & 1 \\ 0 & & & 1 & -2 \end{bmatrix}, \quad \varphi(x) = -\begin{bmatrix} \eta(x_{(1)}) \\ \vdots \\ \eta(x_{(n)}) \end{bmatrix}, \quad B = C^{\mathrm{T}} = \begin{bmatrix} 1 \\ 0 \\ \vdots \\ \vdots \\ 0 \end{bmatrix}$$

Example: Results (1)

- The matrices $\tilde{Q}$ and $\tilde{R}$ can be chosen as

$$\tilde{Q} = \tilde{R}^{-1} = \Sigma = \mathrm{diag}\{\sigma_1, \ldots, \sigma_n\}, \quad \sigma_i > \sigma_{i+1} > 0,$$

  i.e., the system is in (generalized) incrementally balanced form
- Reduction from $n = 100$ to $k = 4$

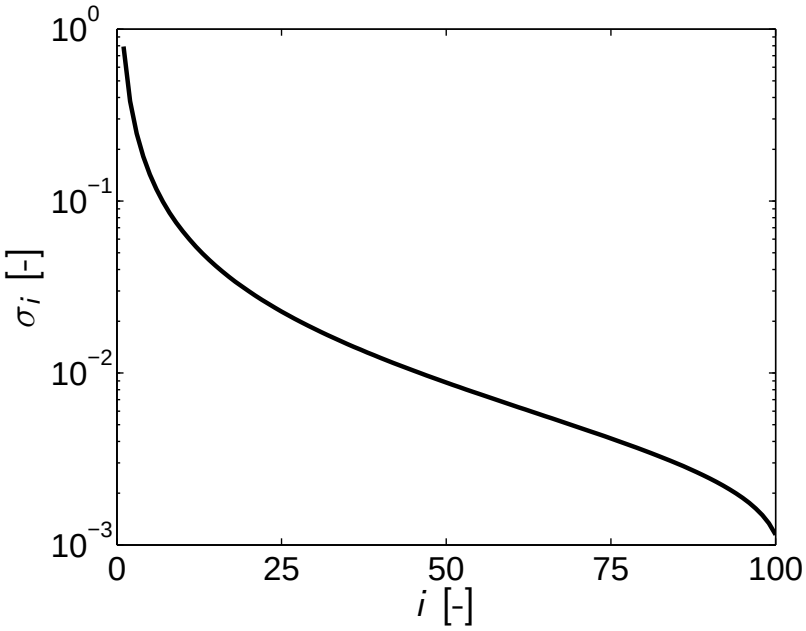

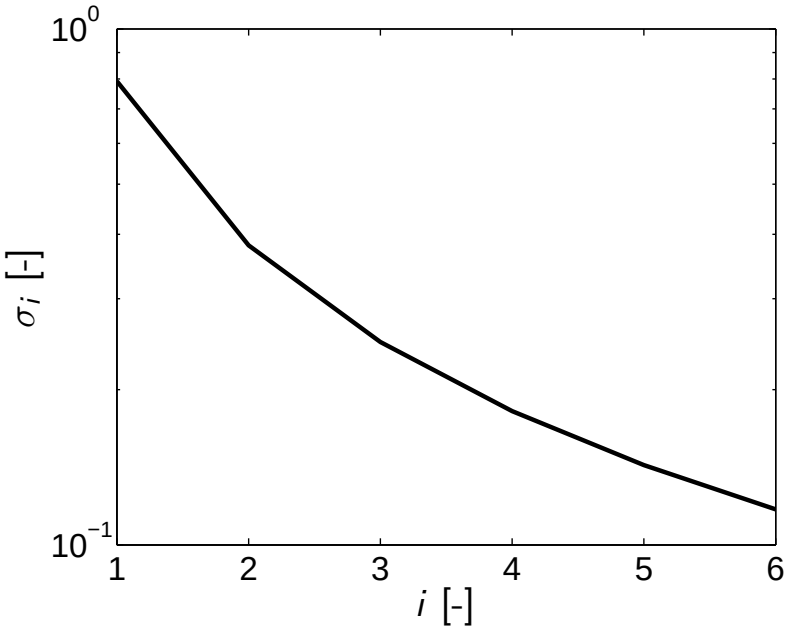

Example: Results (2)

Simulations for $\eta(v) = \text{sign}(v)v^2$ and
$u(t) = \frac{5}{2}(1 - \cos(2\pi \frac{1}{5} t))$ (left) and $u(t) = \frac{1}{2}(1 + \text{sign}(\sin(2\pi \frac{1}{20} t)))$ (right)

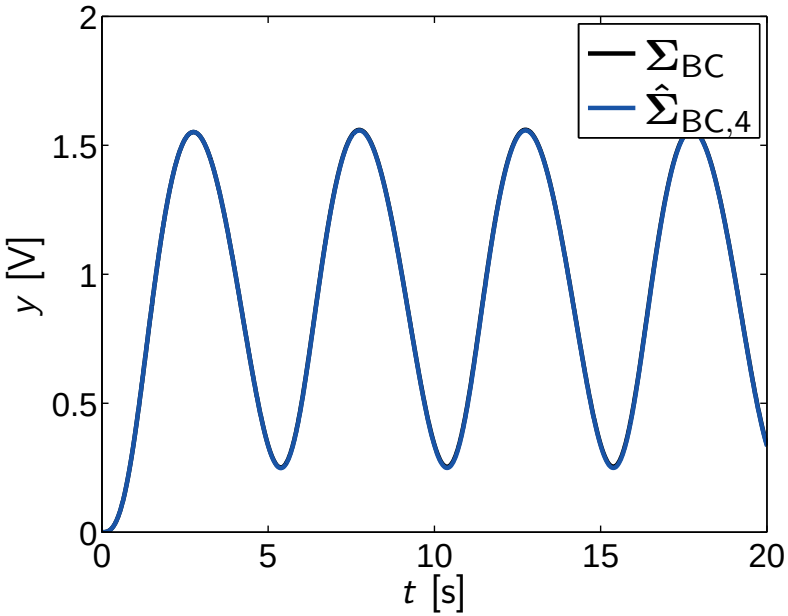

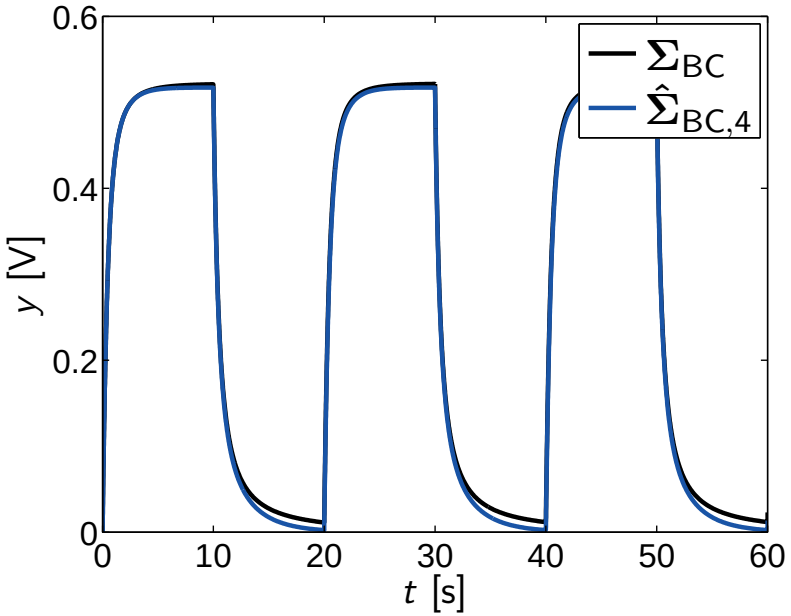

- A priori error bound of the form $\|y - \hat{y}\|_2 \leq \varepsilon \|u\|_2$ with

$$\varepsilon = 2 \sum_{i=5}^{100} \sigma_i = 3.401$$

Conclusions & Open problems

Model reduction for nonlinear systems

1. A class of convergent nonlinear systems
2. Nonlinear systems with incremental gain or passivity properties
3. Incremental balanced truncation for nonlinear systems

Conclusions & Open problems

Model reduction for nonlinear systems

1. A class of convergent nonlinear systems
2. Nonlinear systems with incremental gain or passivity properties
3. Incremental balanced truncation for nonlinear systems

Incremental system properties are crucial in

1. the preservation of relevant stability properties;
2. the derivation of a priori error bounds

References

- B. Besselink, N. van de Wouw, J.M.A. Scherpen, H. Nijmeijer. Model reduction for nonlinear systems by incremental balanced truncation. *IEEE Transactions on Automatic Control*, 59(10):2739-2753, 2014.
- B. Besselink. *Model reduction for nonlinear control systems - with stability preservation and error bounds*. PhD thesis, Eindhoven University of Technology, Eindhoven, the Netherlands, 2012.

Conclusions & Open problems

Model reduction for nonlinear systems

1. A class of convergent nonlinear systems
2. Nonlinear systems with incremental gain or passivity properties
3. Incremental balanced truncation for nonlinear systems

Incremental system properties are crucial in

1. the preservation of relevant stability properties;
2. the derivation of a priori error bounds

Open problems in model reduction

- Preservation of structure, e.g., in networks
- Computational methods for nonlinear systems