Adaptive droop control design with overcurrent protection for onboard DC microgrids in hybrid electric aircrafts

Andrei-Constantin Braitor, Houria Siguerdidjane, Alessio Iovine

CentraleSupélec | université PARIS-SACLAY

Outline

- Motivation
  - Conceptual Schematic
  - Present and Future Trends
- Onboard DC Microgrids – Overview
- Technology Challenges
- Conventional Methods
- System Modelling
- Proposed Controller
  - Controller operation
  - Current-limiting feature
- Simulation
- Conclusions

Conceptual schematic

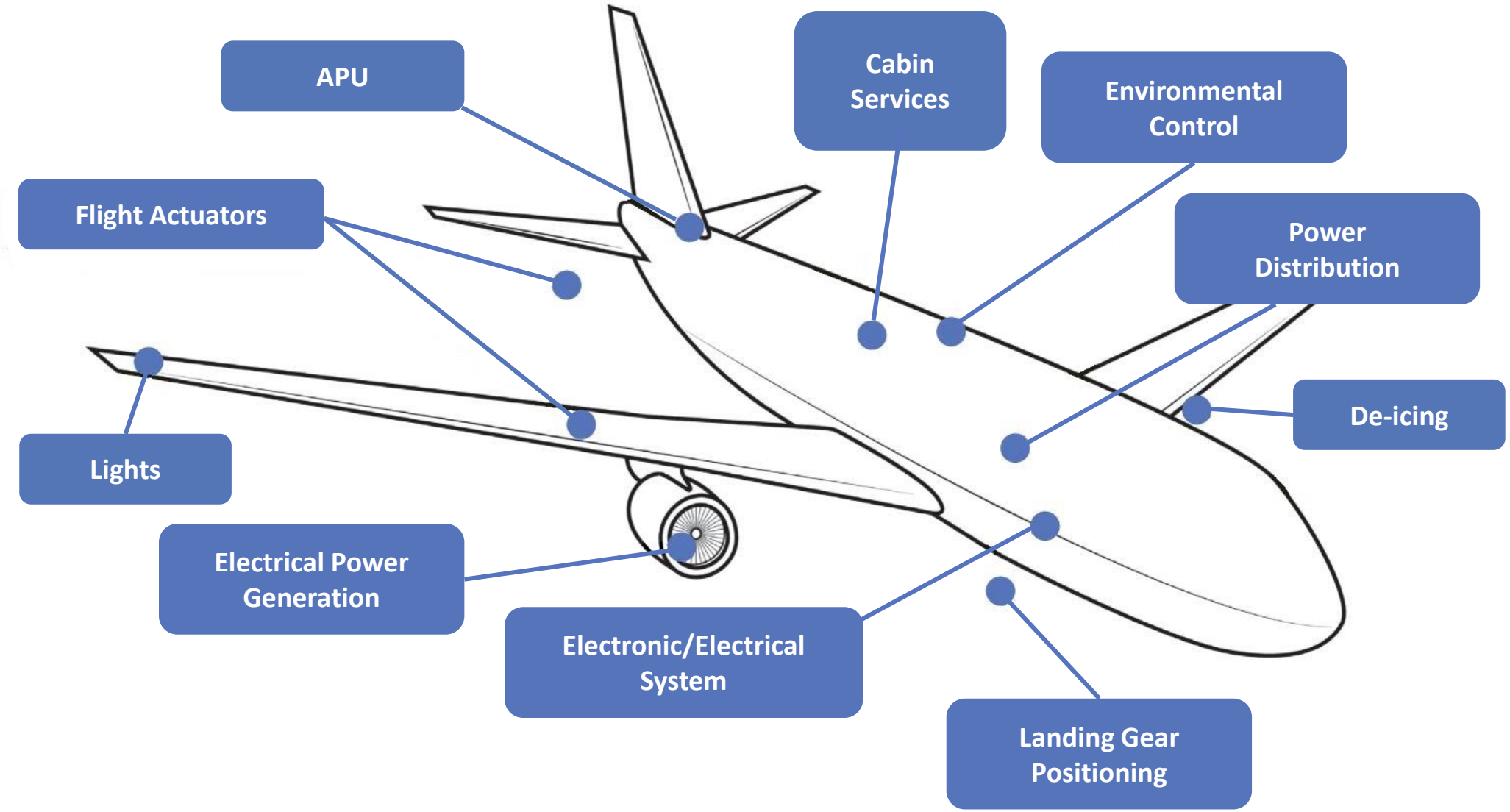

Present and Future Trends

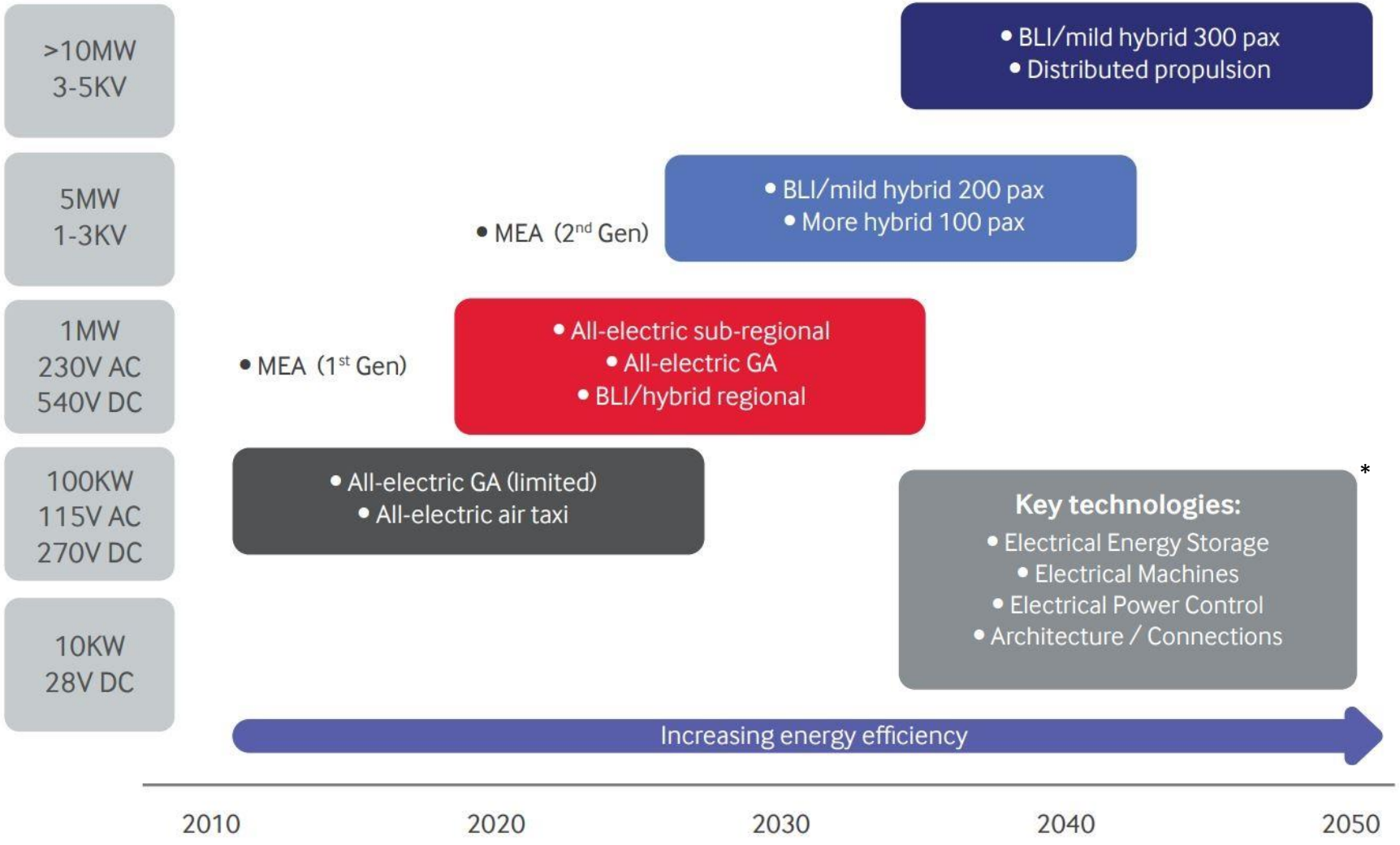

*Aerospace Technology Institute, INSIGHT_07: Electrical Power System.

Onboard DC Microgrids

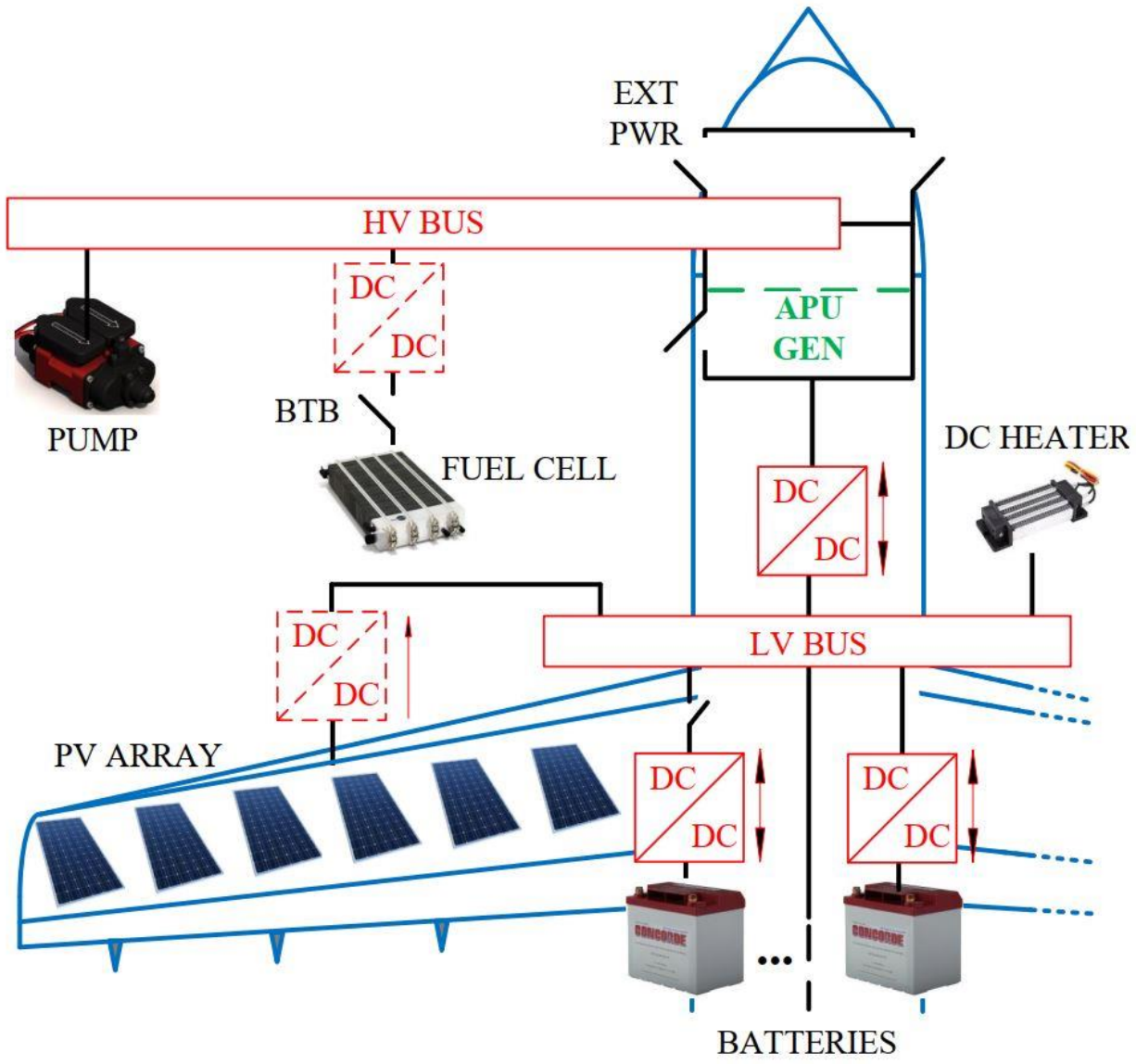

Technical Challenges

Aircraft subsystem to be upgraded	Architecture and interconnect	Energy generation and storage	Electrical machines	Power electronics
High-power generator				
Power sharing control				
Battery				
Fuel cell				
Propulsion motors (distributed)				
Power distribution & protection				
Overall system power demands				

*

Key: **Red** - major challenge; **Blue** - significant challenge; **Grey** - work required but risk manageable; **White** - N/A

*Aerospace Technology Institute, INSIGHT_07: Electrical Power System.

Technical Challenges

Aircraft subsystem to be upgraded	Architecture and interconnect	Energy generation and storage	Electrical machines	Power electronics
High-power generator				
Power sharing control				
Battery				
Fuel cell				
Propulsion motors (distributed)				
Power distribution & protection				
Overall system power demands				

*

Key: **Red** - major challenge; **Blue** - significant challenge; **Grey** - work required but risk manageable; **White** - N/A

*Aerospace Technology Institute, INSIGHT_07: Electrical Power System.

System modelling

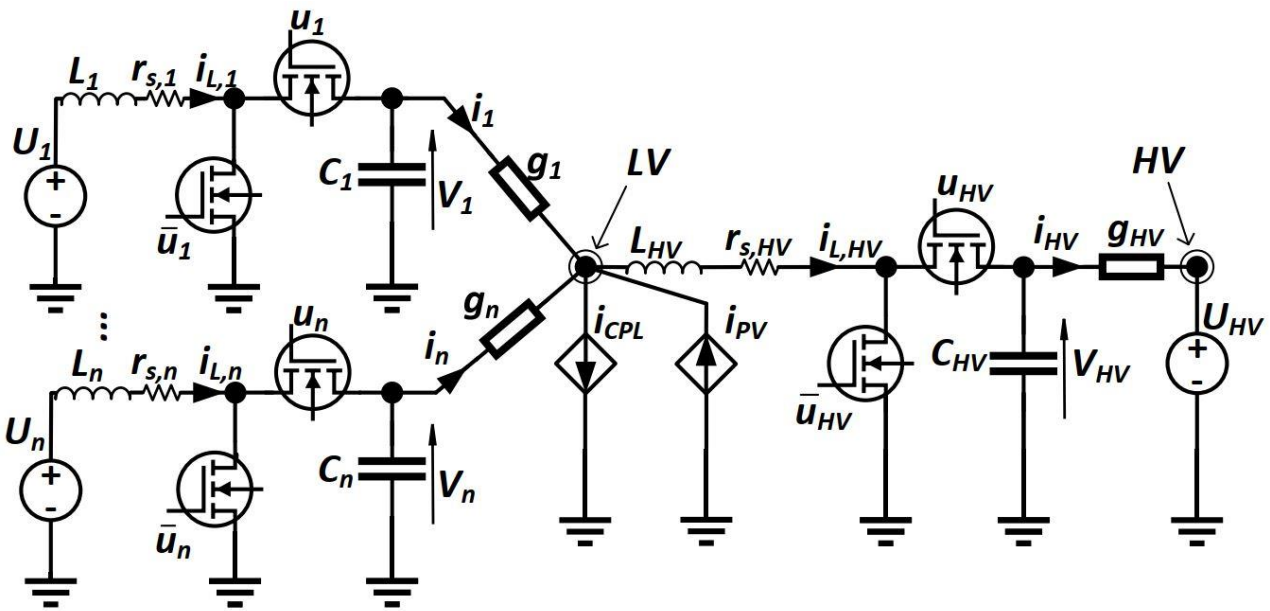

$$L_i \frac{di_{L,i}}{dt} = U_i - r_{s,i} i_{L,i} - (1 - u_i) V_i$$

$$C_i \frac{dV_i}{dt} = (1 - u_i) i_{L,i} - i_i \qquad \forall\, i \in \{1, \dots, n\}$$

$$L_{HV} \frac{di_{L,HV}}{dt} = V_{LV} - r_{s,HV} i_{L,HV} - (1 - u_{HV}) V_{HV}$$

$$C_{HV} \frac{dV_{HV}}{dt} = (1 - u_{HV}) i_{L,HV} - i_{HV}$$

Constant power loads (CPLs)

$$P = i_{CPL} V_{LV}$$

$$i_{CPL} = i_{PV} - i_{HV} + \sum_{i=1}^{n} g_i (V_i - V_{LV})$$

Adaptive droop control

$$\tau_j \dot{V}_j = V_j^* - V_j - m_j i_j, \qquad \forall\, j \in \{1, \dots, n, HV\}$$

Drawbacks:

- Mismatches in output/line resistances cause inaccurate power sharing.
- Trade-off between the voltage regulation and load power sharing.
- External protection circuits/limiters are required under faulty conditions.

Proposed robust droop for converters interfacing BESS (HV interconnection) takes the form.

$$\boldsymbol{\tau_i \dot{V}_i} = V^* - \boldsymbol{V_{LV}} - \frac{\boldsymbol{m_i}}{\boldsymbol{SOC_i^{\rho}}} \boldsymbol{i_i}, \qquad \forall\, i \in \{1, \dots, n\}$$

$$\boldsymbol{\tau_{HV} \dot{V}_{HV}} = \boldsymbol{V_{HV}^*} - \boldsymbol{V_{HV}} - \boldsymbol{m}(\boldsymbol{i_{HV}} - \boldsymbol{i_{set}})$$

For $\boldsymbol{m_1 = m_2 = \cdots = m_n}$, one obtains

$$\frac{\mathbf{1}}{\boldsymbol{SOC_1^{\rho}}} \boldsymbol{i_1} = \frac{\mathbf{1}}{\boldsymbol{SOC_2^{\rho}}} \boldsymbol{i_2} = \cdots = \frac{\mathbf{1}}{\boldsymbol{SOC_n^{\rho}}} \boldsymbol{i_n}$$

which can guarantee load power sharing proportional to the BESS instantaneous state of charge.

Adaptive droop control

Suppressing circulating currents

E.g. for two BESS at the LV bus, one has the circulating current i_{cc} as

$$i_{cc} = i_1 - \frac{m_2}{SOC_2^{\rho}}\left(\frac{m_1}{SOC_1^{\rho}}\right)^{-1} i_2 \longrightarrow i_{cc} \to 0$$

Voltage reference selection to avoid voltage collapse

V^* selection is made satisfying an inequality of the form

$$V^* > \phi(P)$$

Adaptive droop control

Consider the input duty-ratio defined as

$$u_j = 1 - \frac{U_j - E_{max,j} sin(\sigma_j) + r_{v,j} i_{L,j}}{V_j}$$

$$\dot{\sigma}_j = \frac{k_{I,j}}{r_{v,j}} f(i_{L,j}, V_j) cos(\sigma_j)$$

where f is a smooth functions that incorporates the adaptive droop control, or the current control for HV interconnection

$$f(i_{L,j}, V_j) = \begin{cases} V^* - V_{LV} - \frac{m_i}{SOC_i^{\rho}} i_i, & \forall\, i \in \{1, \dots, n\} \\ V_{HV}^* - V_{HV} - m(i_{HV} - i_{set}) \end{cases}$$

Assumption. The present approach considers at least one converter-interfaced source connected to the low-voltage bus to stabilise the bus voltage.

Adaptive droop control

By replacing the control input u_j into the current dynamics, one obtains the closed-loop current dynamics

$$L\frac{di_{L,j}}{dt} = E_{max,j}sin(\sigma_j) - (r_{s,j} + r_{v,j})i_{L,j}$$

At steady state, there is

$$i_{L,j} \approx \frac{E_{max,j}sin(\sigma_j)}{r_{v,j}}$$

Proposition 2. The solution $i_{L,j}(t)$ with the initial condition $i_{L,j}(0) \leq \frac{E_{max,j}}{r_{v,j}}$ is uniformly ultimately bounded, i.e. $|i_{L,j}(t)| \leq i_{L,j}^{max}, \forall\, t > 0$, with the maximum current given as $i_{L,j}^{max} = \frac{E_{max,j}}{r_{v,j}}$.

Proof. Consider the following continuously differentiable Lyaponov function candidate

$$W_j = \frac{1}{2}L_j i_{L,j}$$

By taking the time derivative

$$\dot{W}_j = -(r_{s,j} + r_{v,j})i_{L,j}^2 + E_{max,j}sin(\sigma_j)i_{L,j}$$

Adaptive droop control

By taking the time derivative

$$\dot{W}_j \leq -(r_{s,j} + r_{v,j})i_{L,j}^2 + |E_{max,j} sin(\sigma_j)||i_{L,j}|$$

Given $\sigma_j \in \left[-\frac{\pi}{2}, \frac{\pi}{2}\right]$ from the nonlinear sl-PID design, one has

$$\dot{W}_j \leq -(r_{s,j} + r_{v,j})i_{L,j}^2 + E_{max,j}|i_{L,j}|,$$

which implies that

$$\dot{W}_j \leq -r_{s,j} i_{L,j}^2, \qquad \forall\, |i_{L,j}| \geq \frac{E_{max,j}}{r_{v,j}}$$

The solution is uniformly ultimately bounded. Thus, if initially $i_{L,j}(0) \leq \frac{E_{max,j}}{r_{v,j}}$, then it holds that

$$i_{L,j}(t) \leq \frac{E_{max,j}}{r_{v,j}}, \qquad \forall\, t > 0$$

$$\frac{E_{max,j}}{r_{v,j}} \rightarrow i_{L,j}^{max}$$

The proof is complete. ■

Simulation results

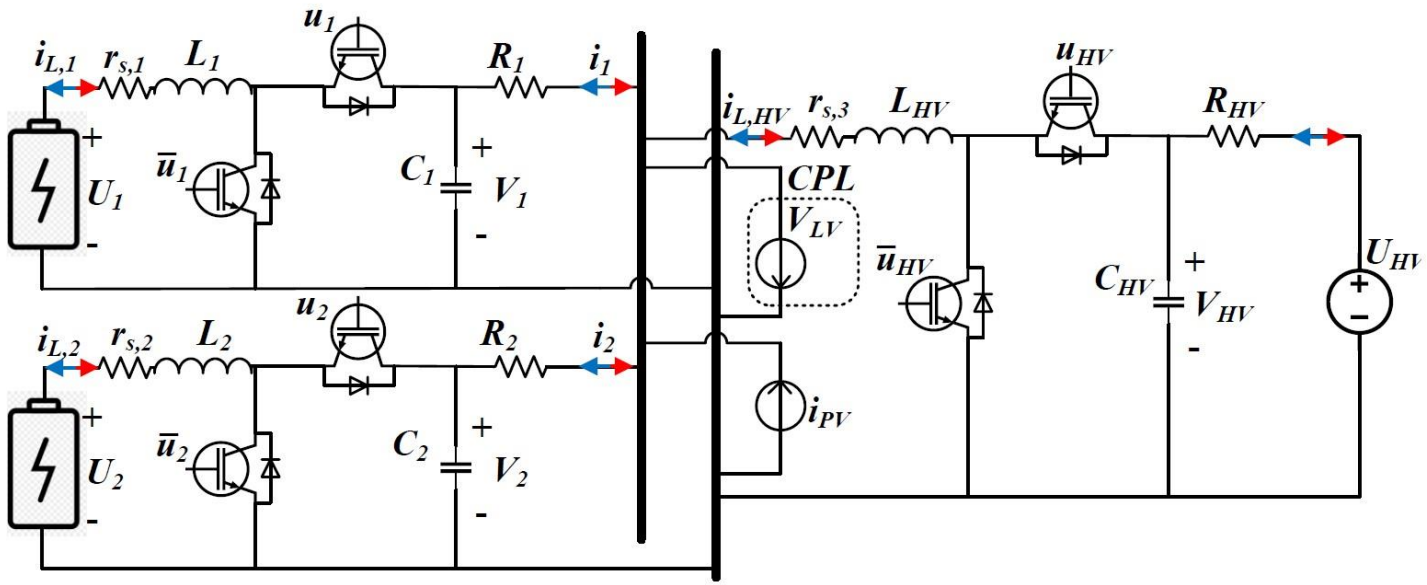

System and control parameters	Values
$R_1,\ R_2,\ R_{HV}$	$0.04\,\Omega,\ 0.12\,\Omega,\ 0.1\,\Omega$
$L_1,\ L_2,\ L_{HV}$	$0.002\,H$
$r_{s,1},\ r_{s,2},\ r_{s,3}$	$0.001\,\Omega$
$U_{BAT,1},\ U_{BAT,2}$	$48\,V$
$C_1,\ C_2,\ C_{HV}$	$100\,\mu F$
ρ	3
$k_{I1},\ k_{I2},\ k_{I3} \times 10^{-4}$	1.1, 6, 9
$i_{max,1},\ i_{max,2},\ i_{max,3}$	$10\,A,\ 10\,A,\ 5\,A$
$r_{v,1},\ r_{v,2},\ r_{v,3}$	$1\,\Omega$

Simulation results

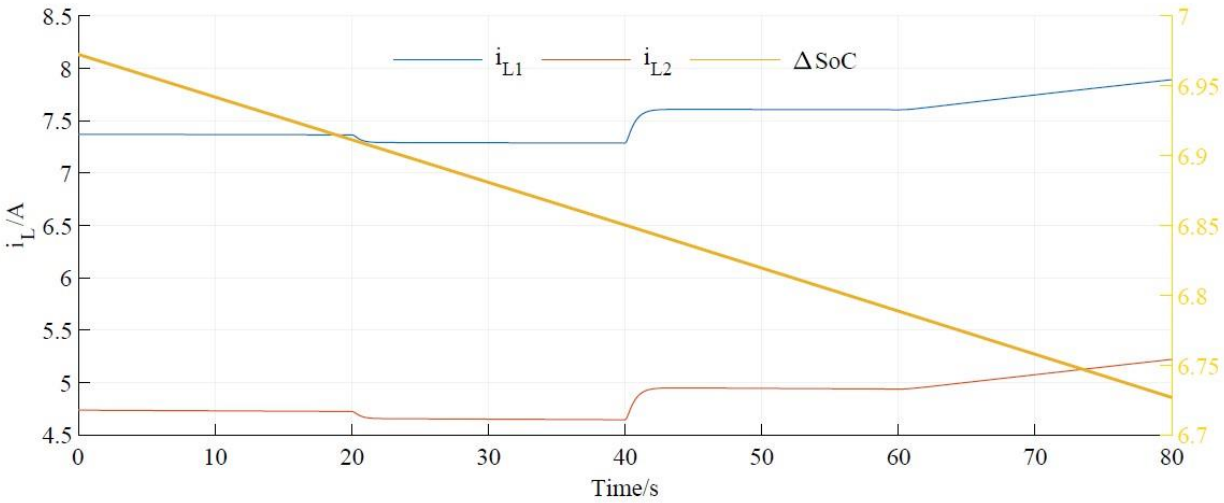

a) battery currents and state-of-charge difference

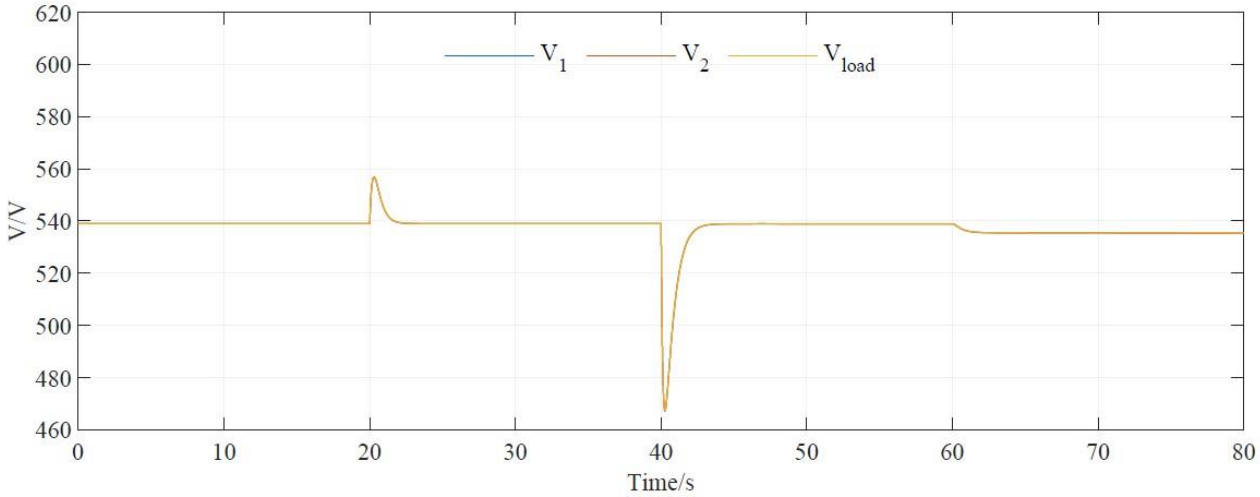

b) capacitor and LV bus voltages

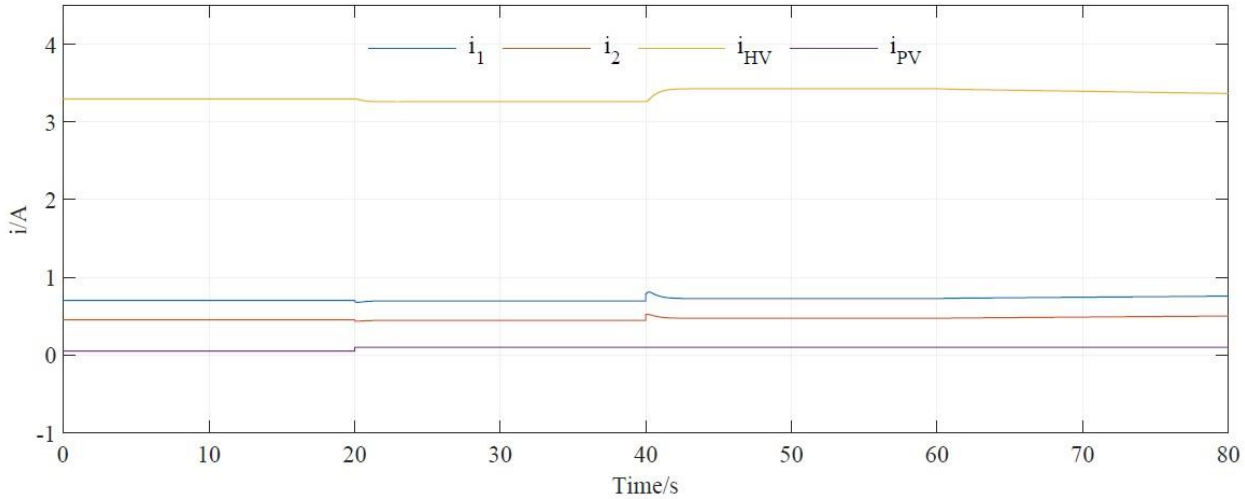

c) output currents

Conclusions

The controller proposed can achieve the following:

- ✓ Load power sharing among BESS
- ✓ Voltage regulation near reference
- ✓ Input/interconnection current limitation without knowledge of the system parameters and additional protection circuits such as limiters and/or saturators.